Instructions & Design provided by:

Anleitung & Design erstellt von:

Ron_McPhatty

Rebrickable

https://rebrickable.com/users/ron_mcphatty/mocs/

Instagram

https://www.instagram.com/ron_mcphatty/?hl=de

Expansion packs brought to you by:

BriXpando

C-3PO

HUMAN-CYBORG RELATIONS

75398 MOD
INSTRUCTIONS BY
RON_MCPHATTY

1

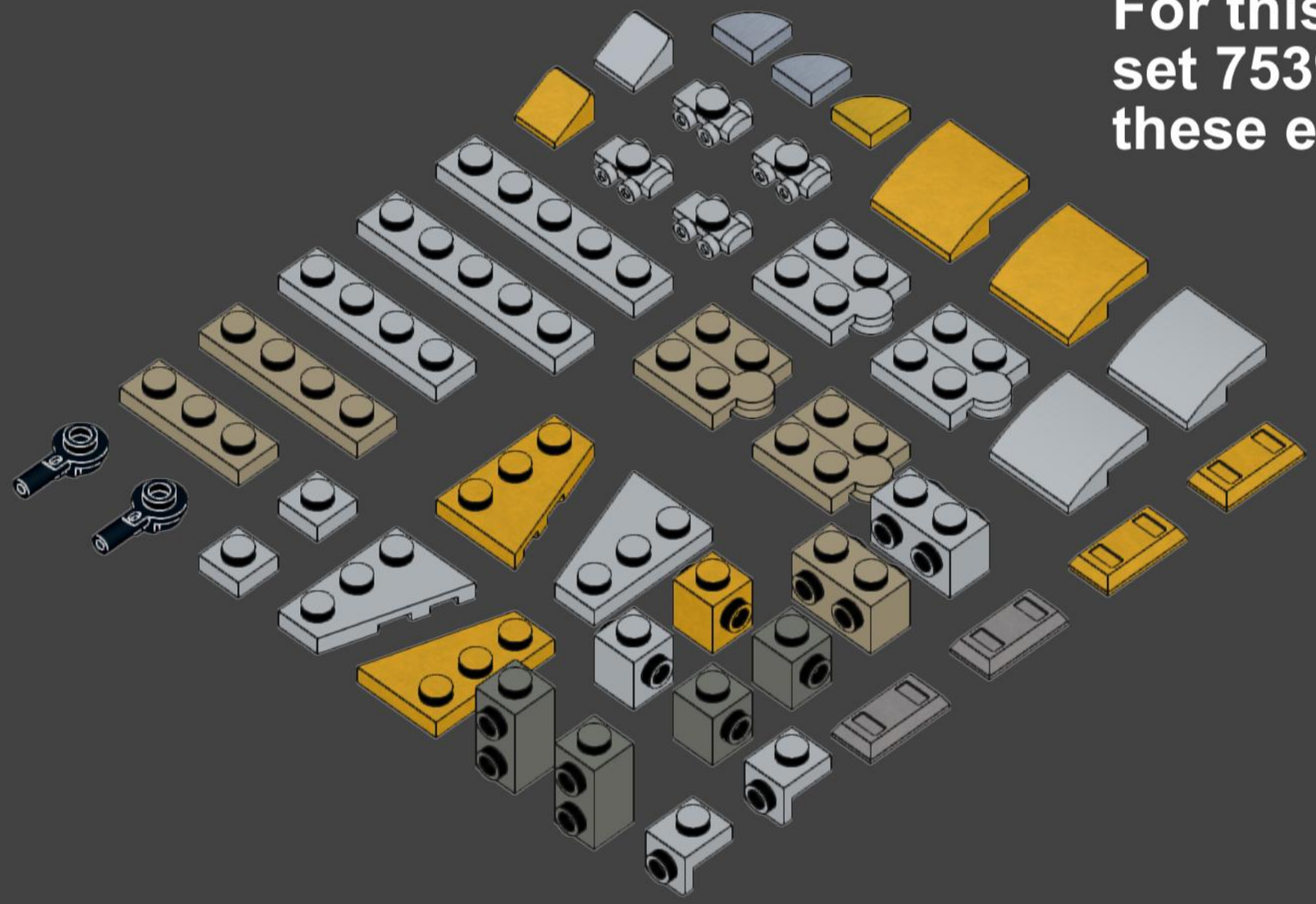

For this modification of set 75398 you will need these extra pieces.

2

Remove C-3PO's head, base and feet.

Disassemble the feet, some pieces will be reused.

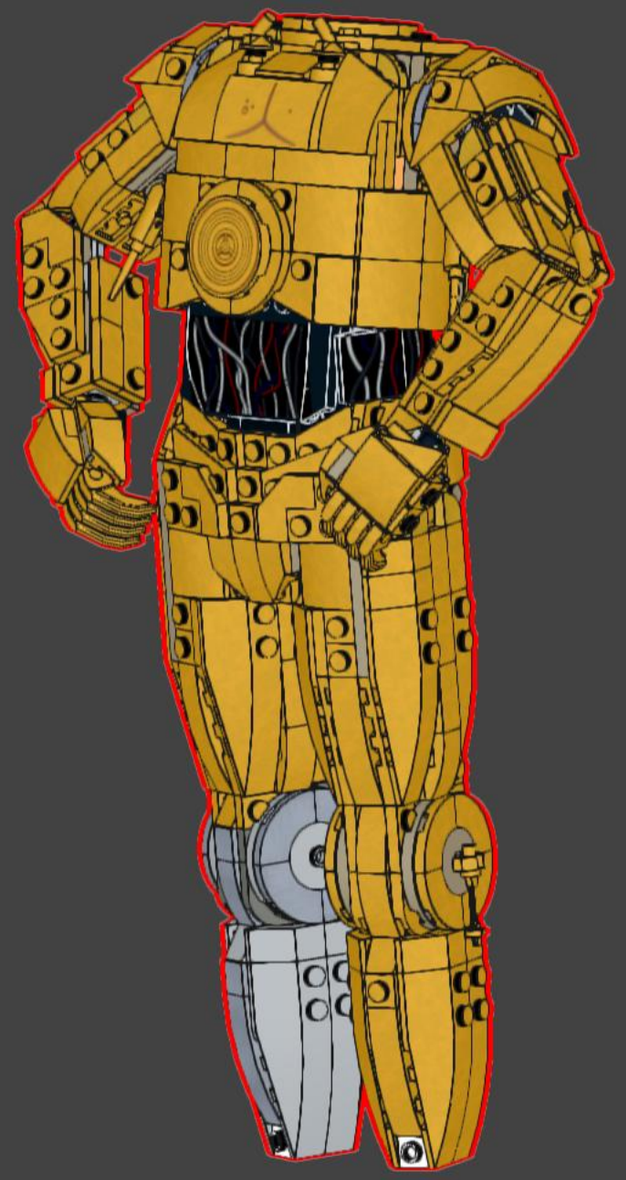

3

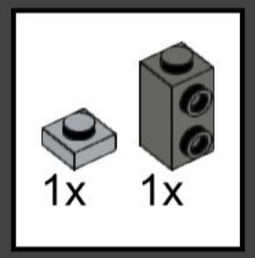

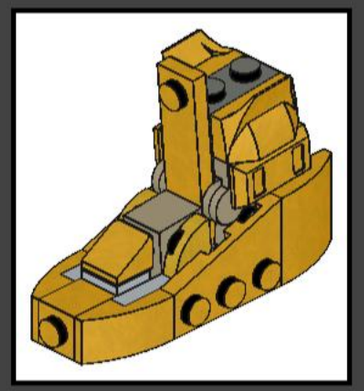

4

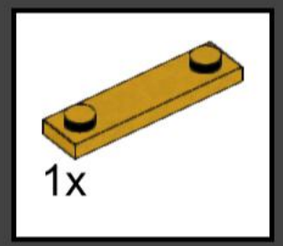

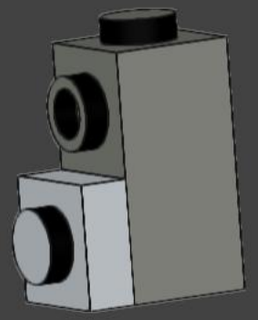

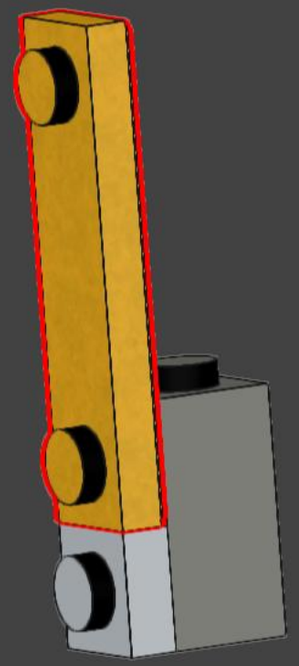

5

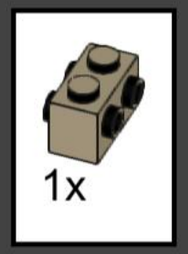

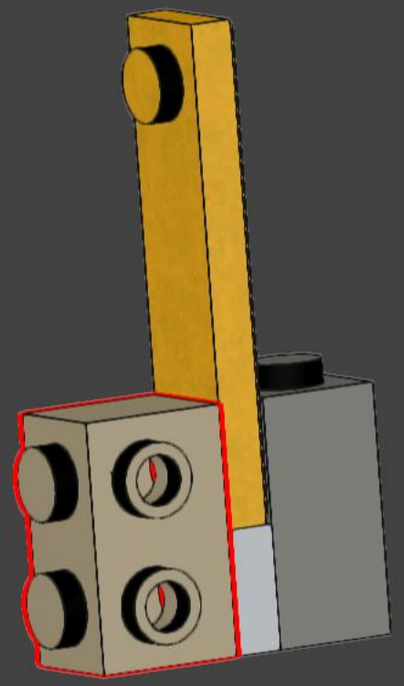

6

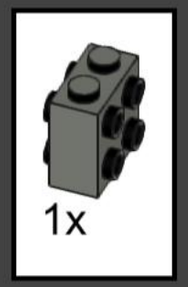

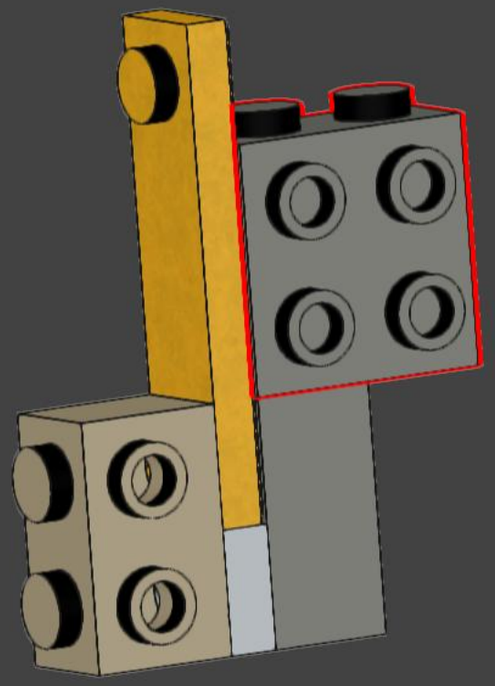

7

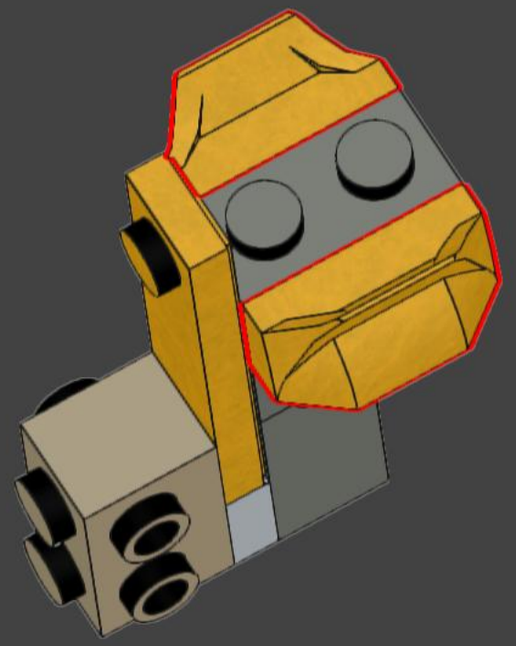

8

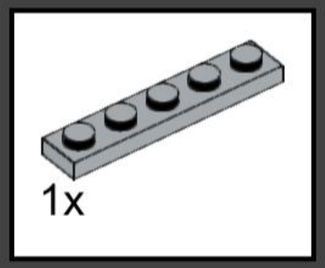

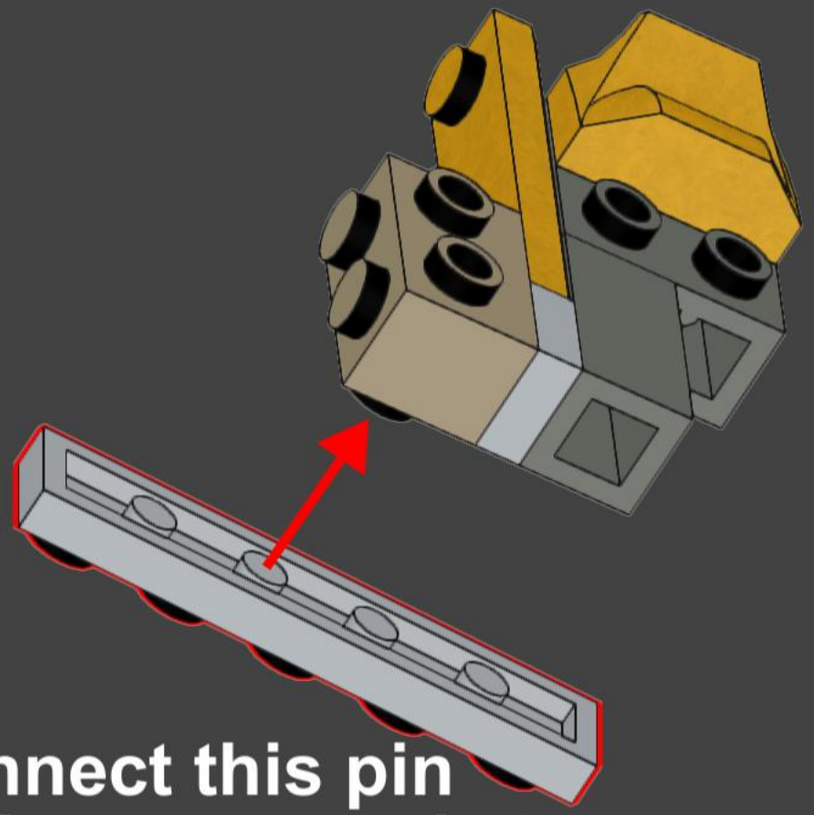

Connect this pin to the open stud

9

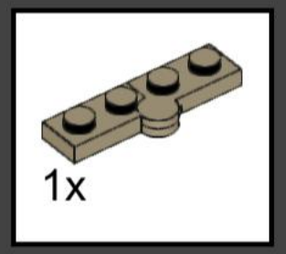

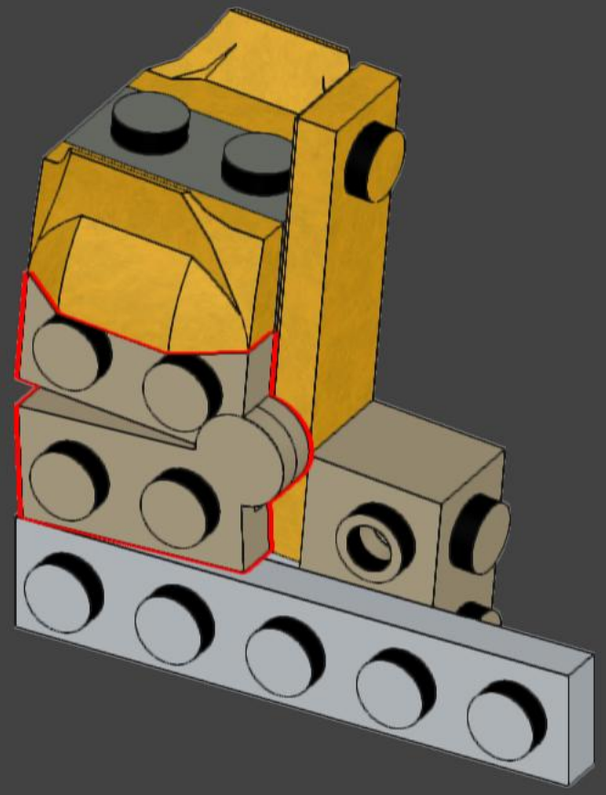

The hinge plate will not align with the 1x5 plate, but don't worry this is intentional :)

10

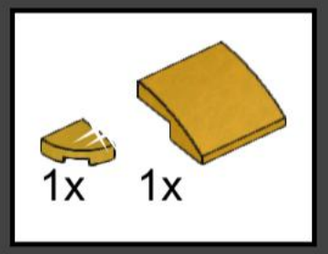

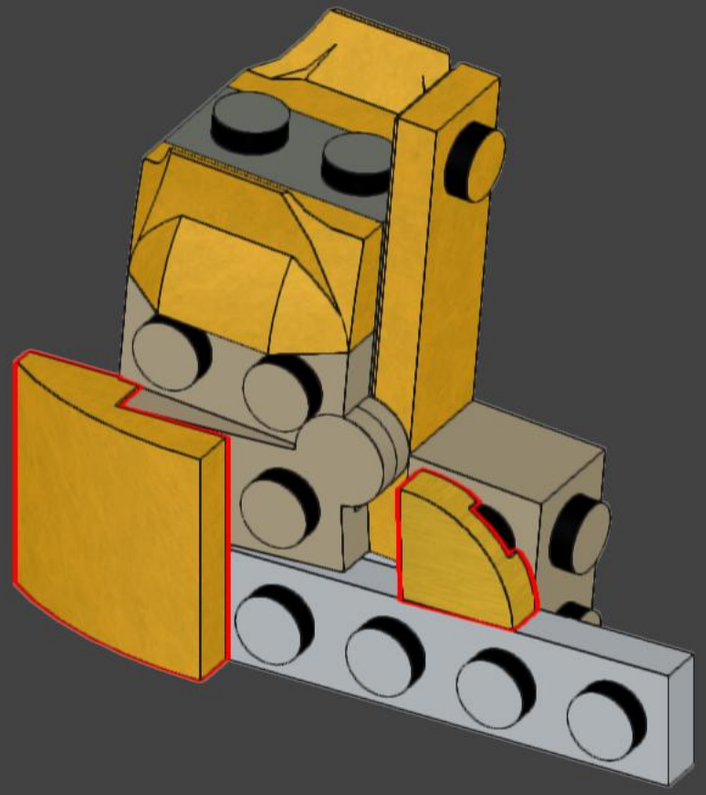

11

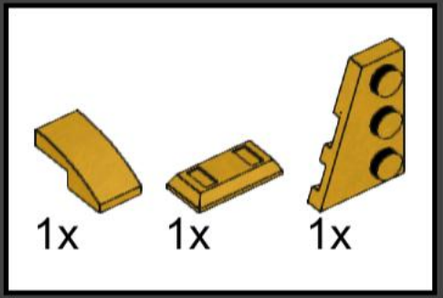

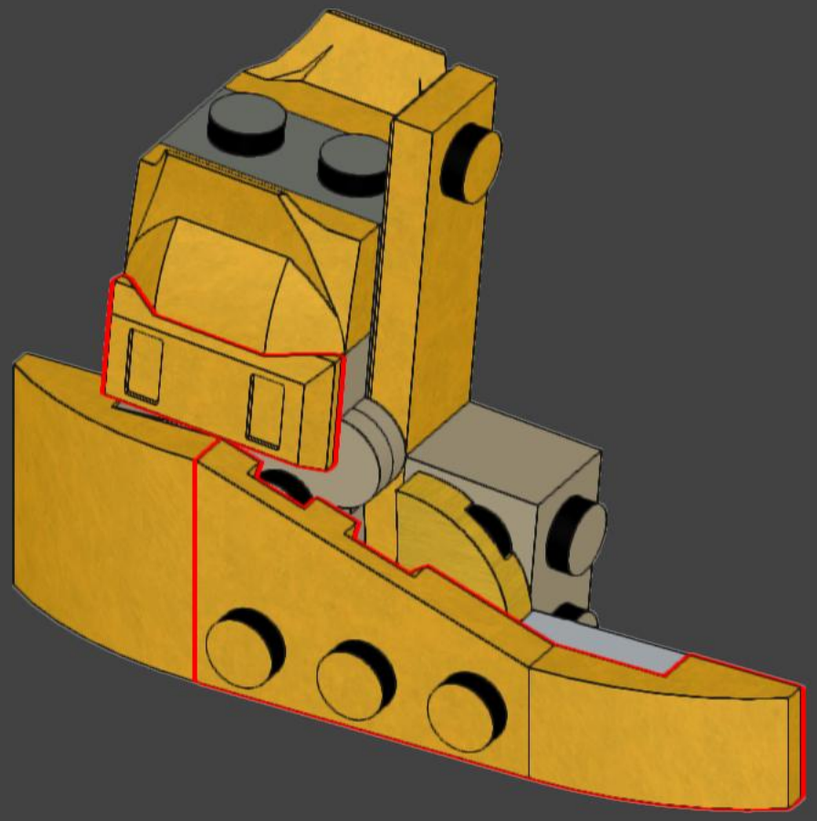

12

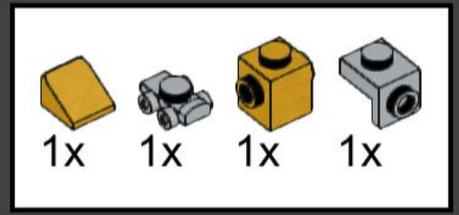

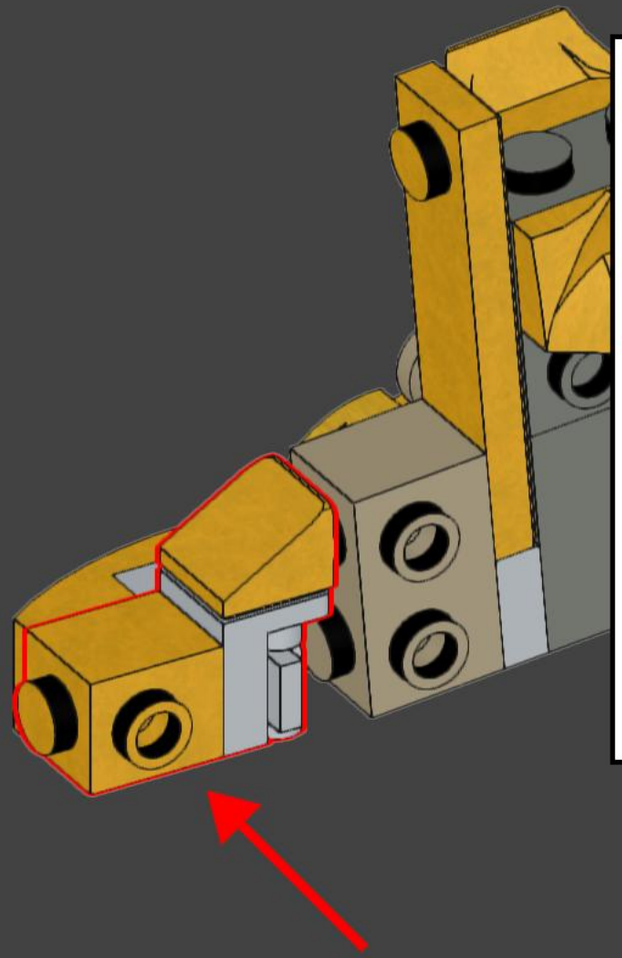

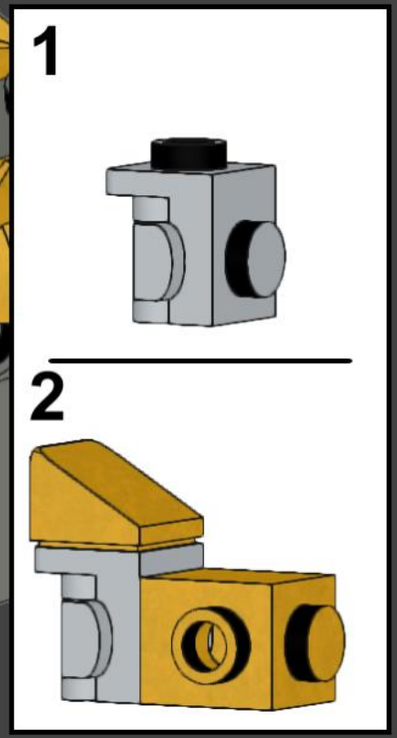

13

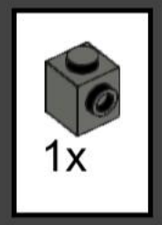

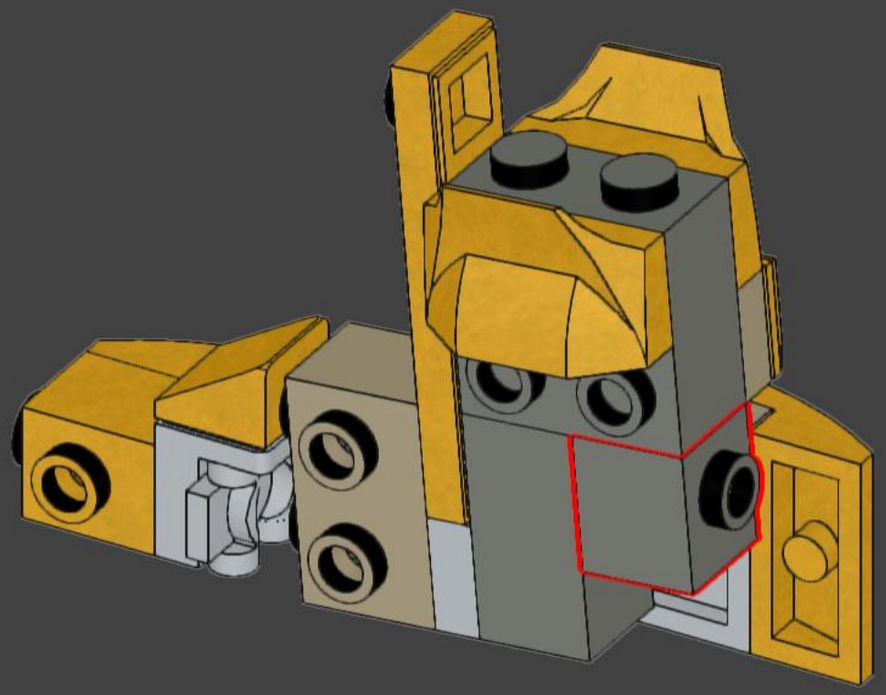

14

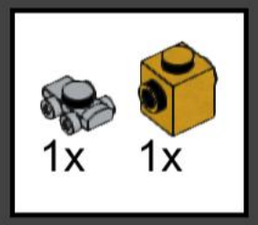

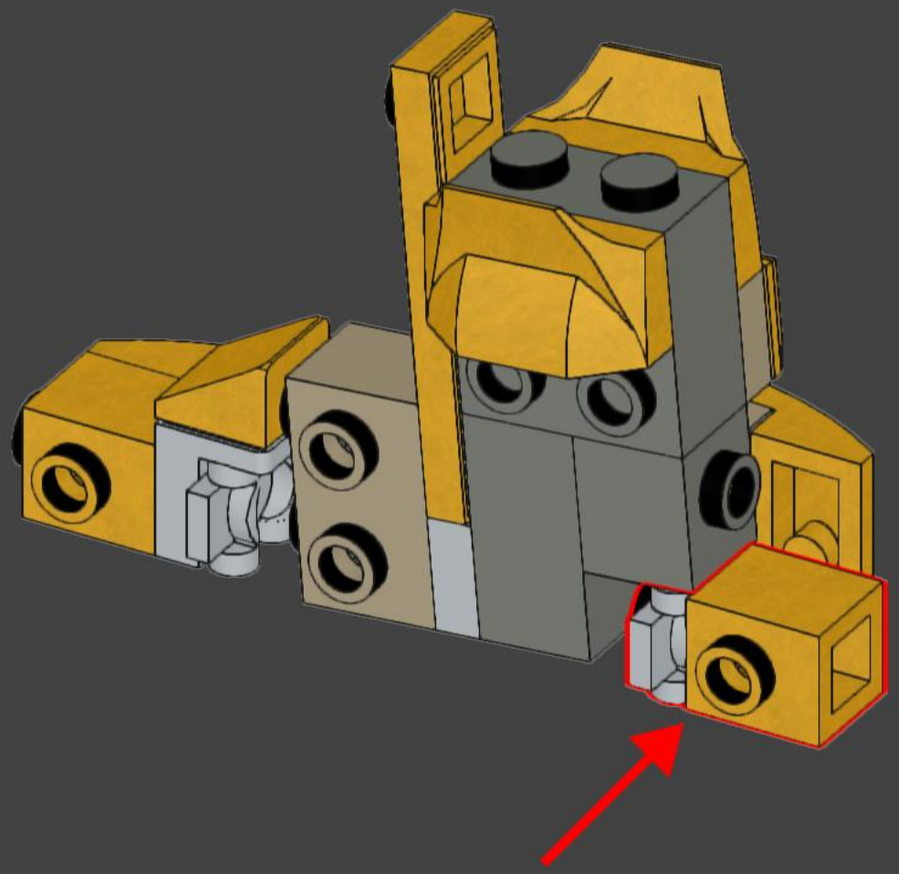

15

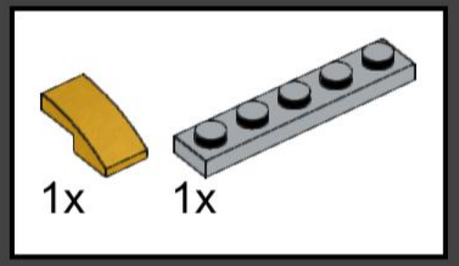

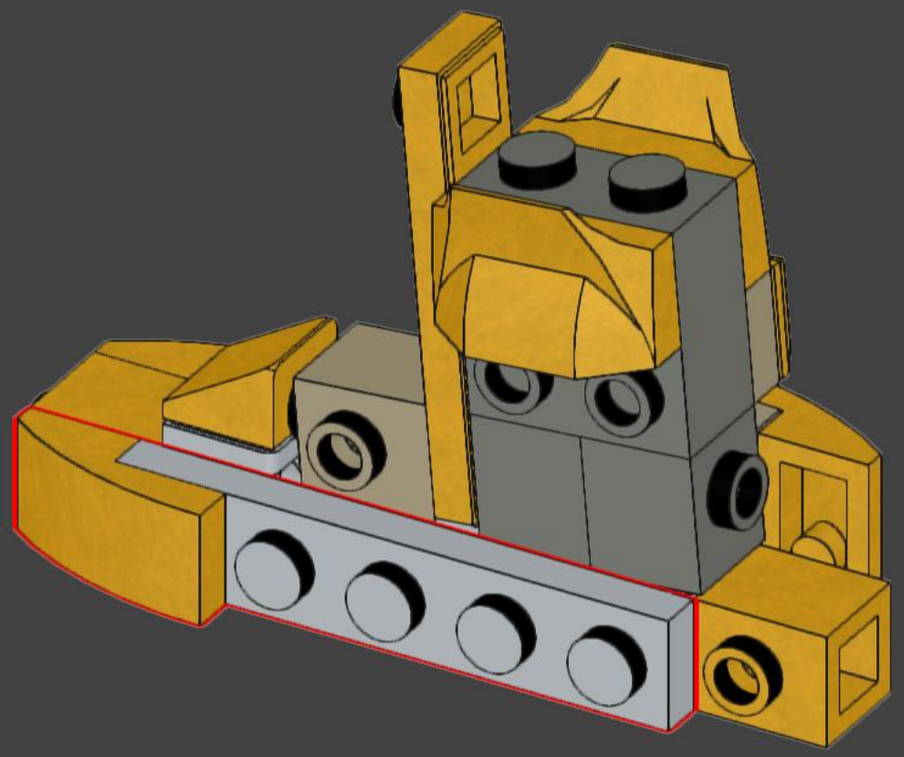

16

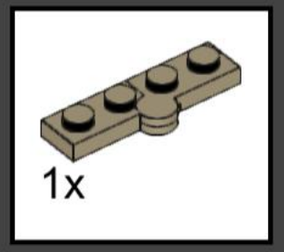

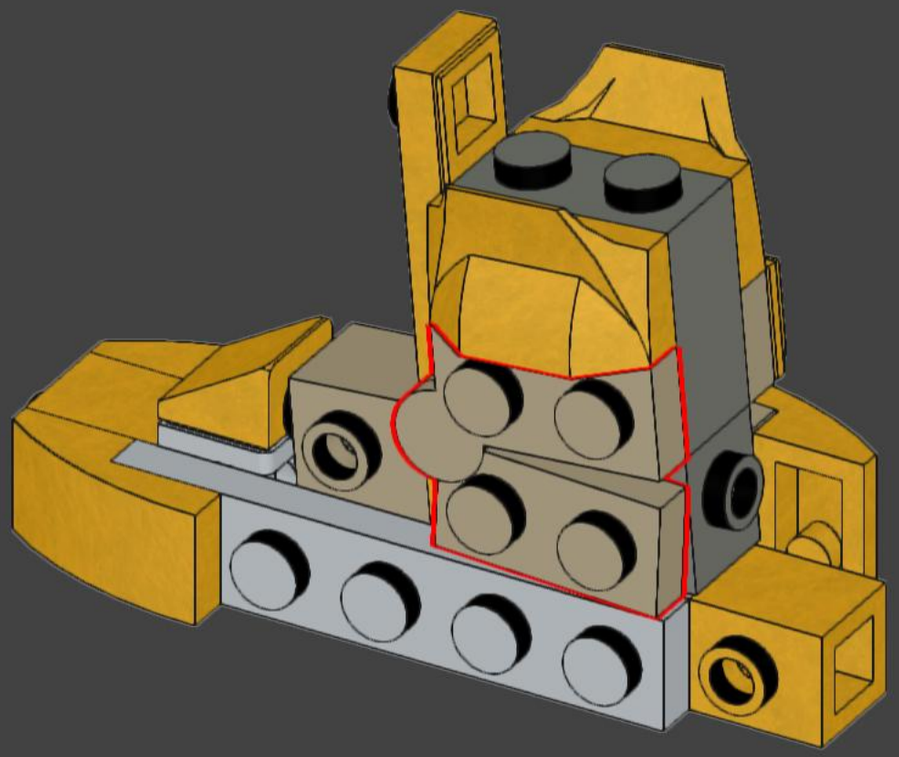

17

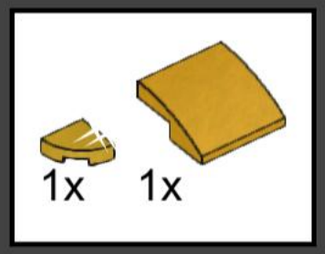

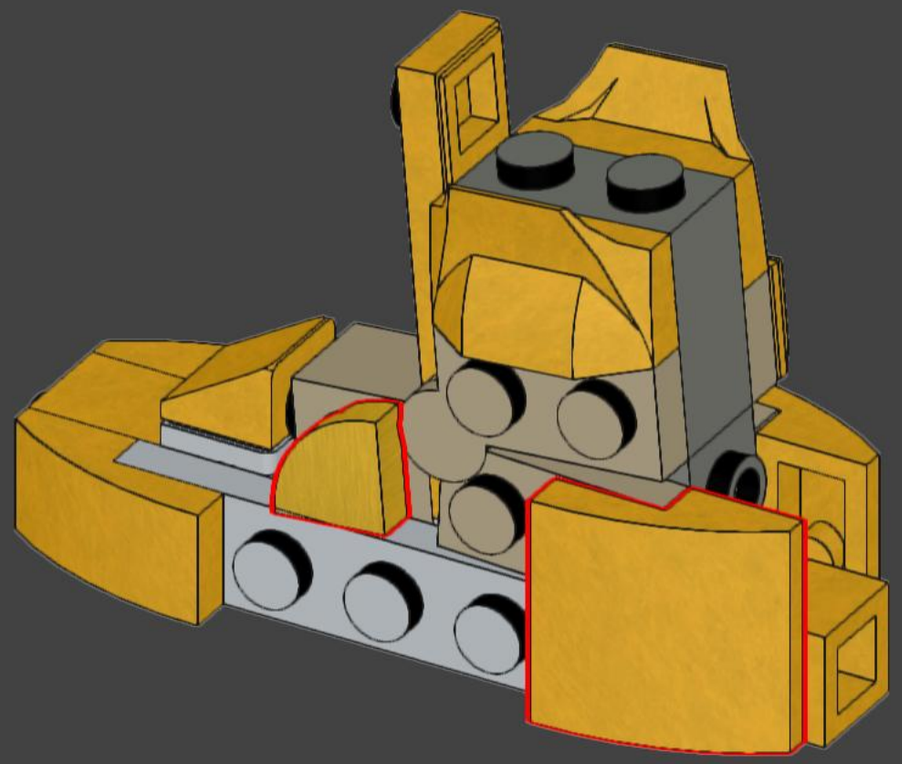

18

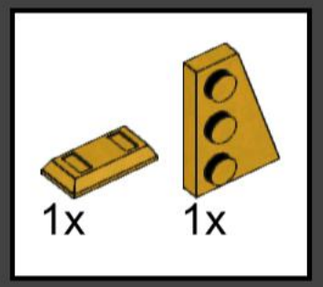

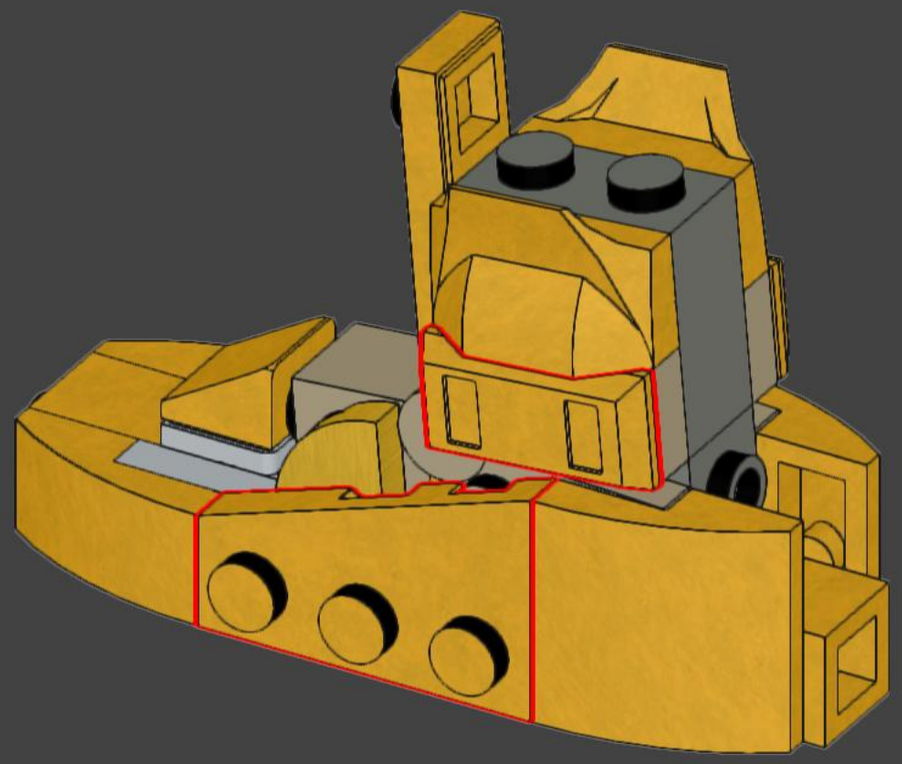

19

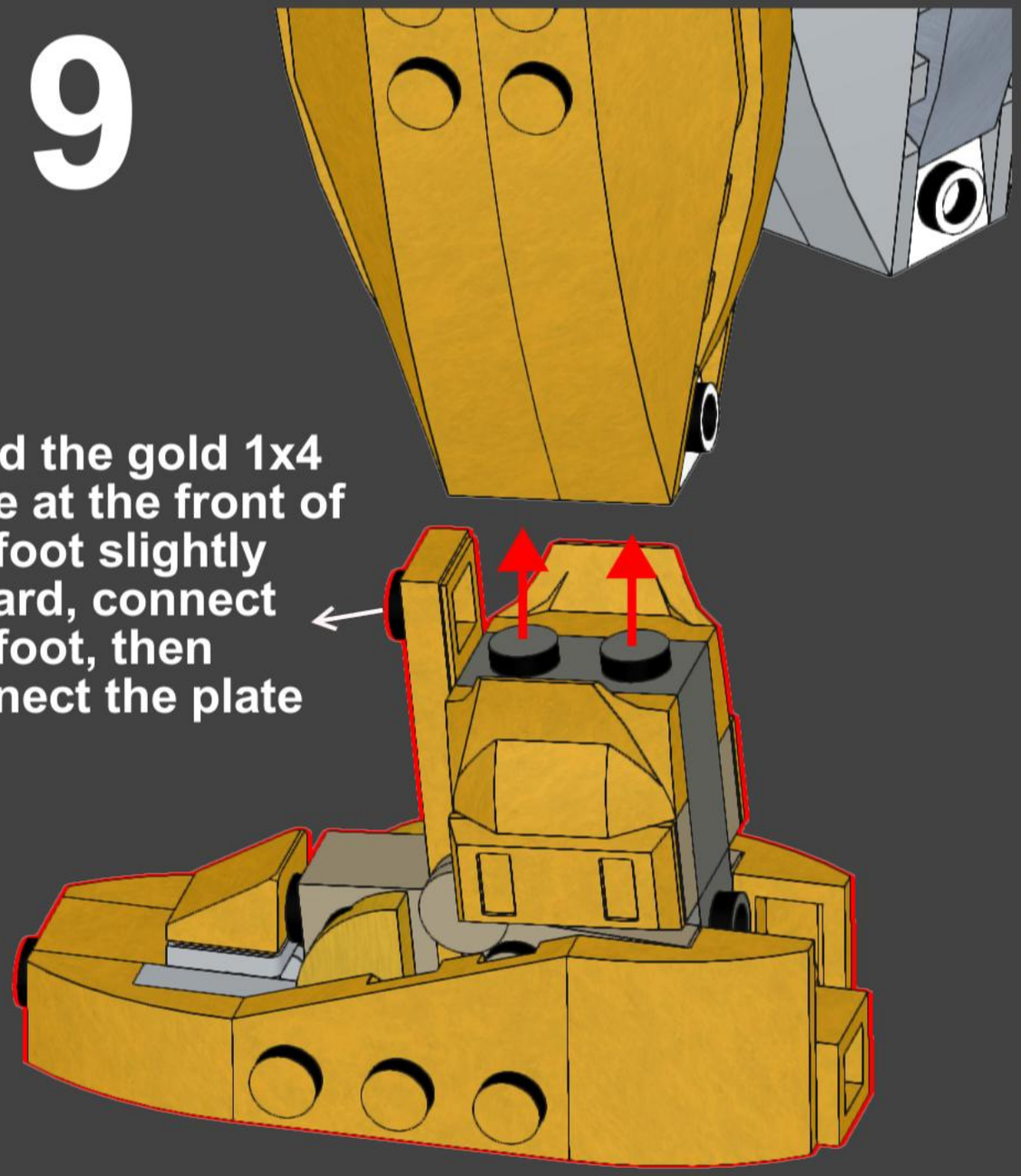

Bend the gold 1x4 plate at the front of the foot slightly foward, connect the foot, then connect the plate

20

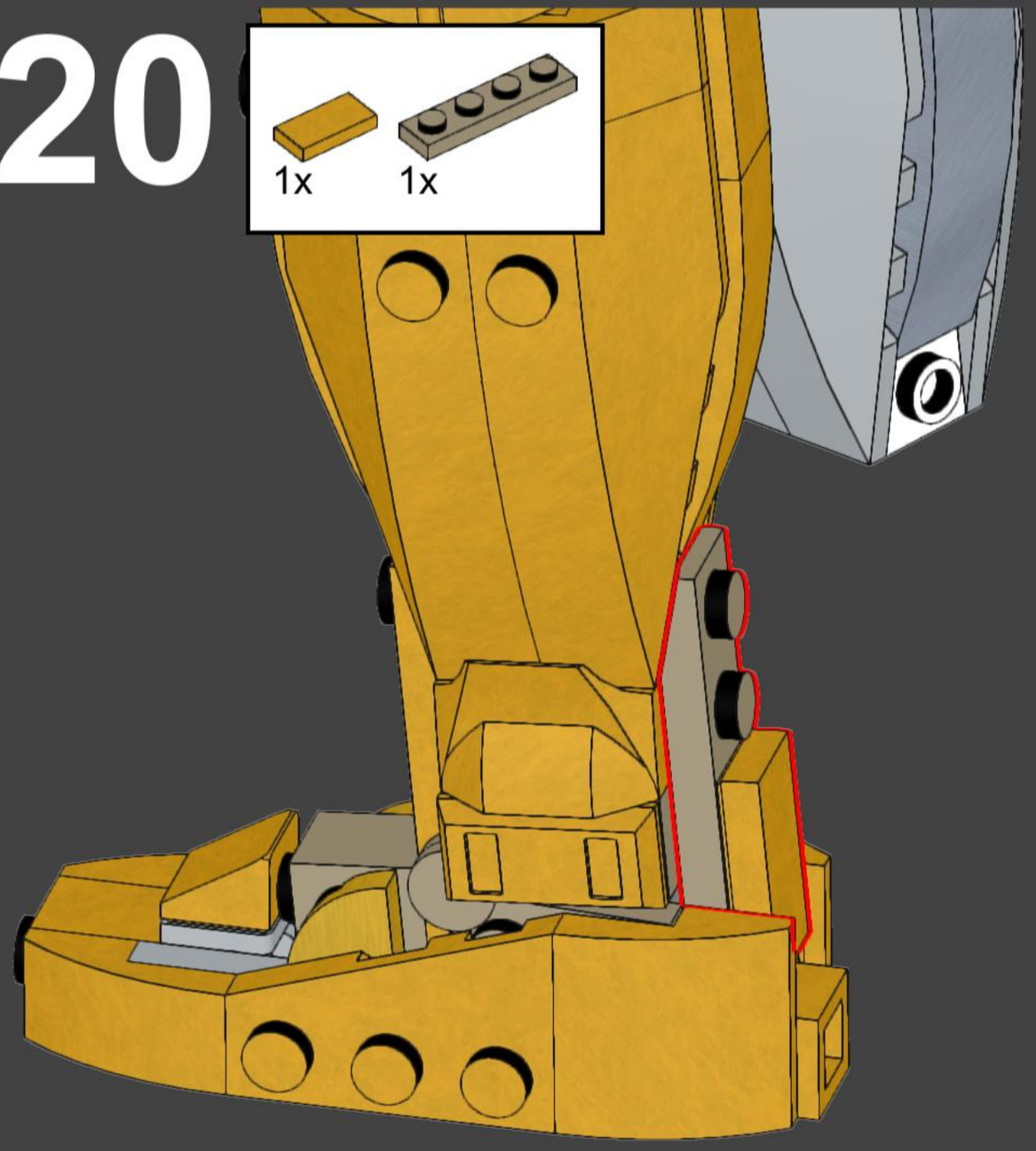

21

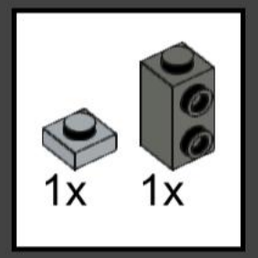

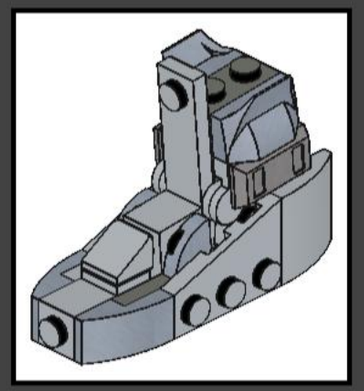

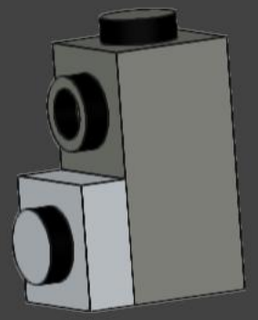

22

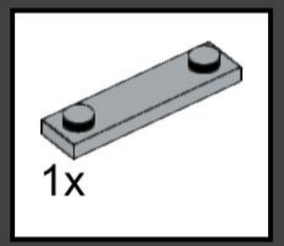

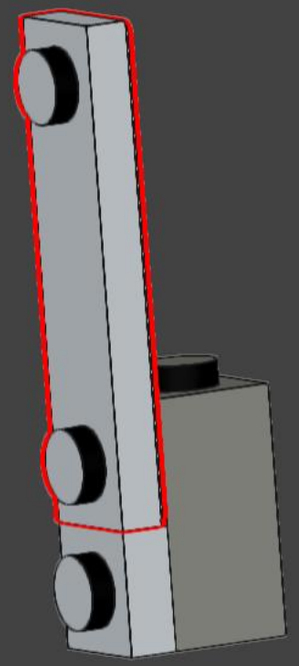

23

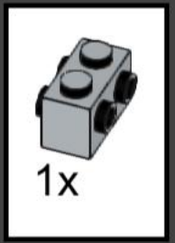

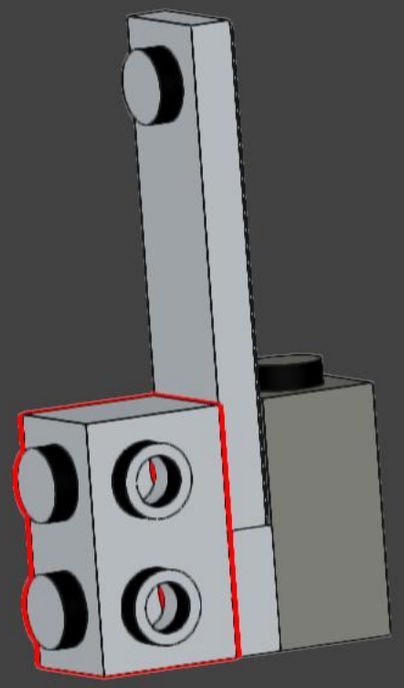

24

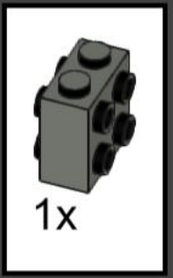

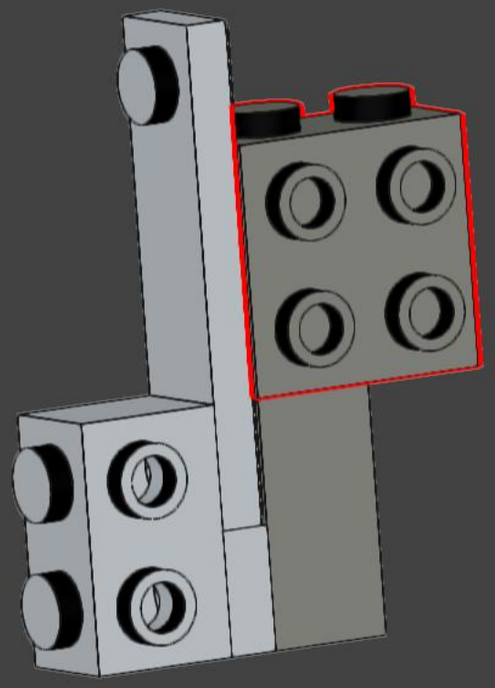

25

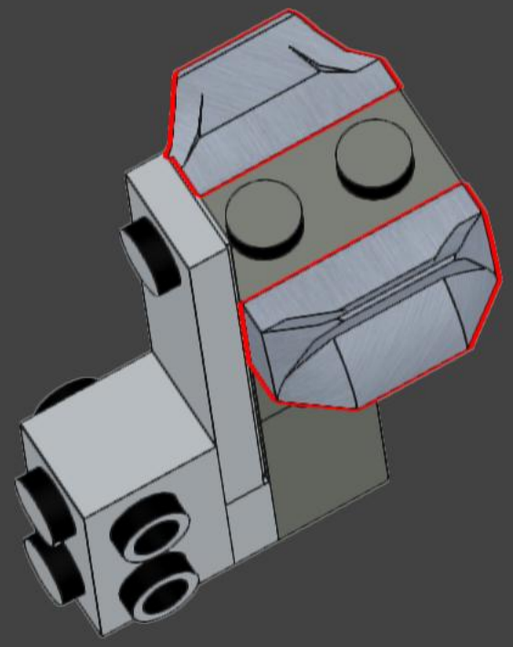

26

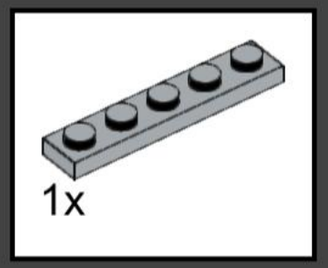

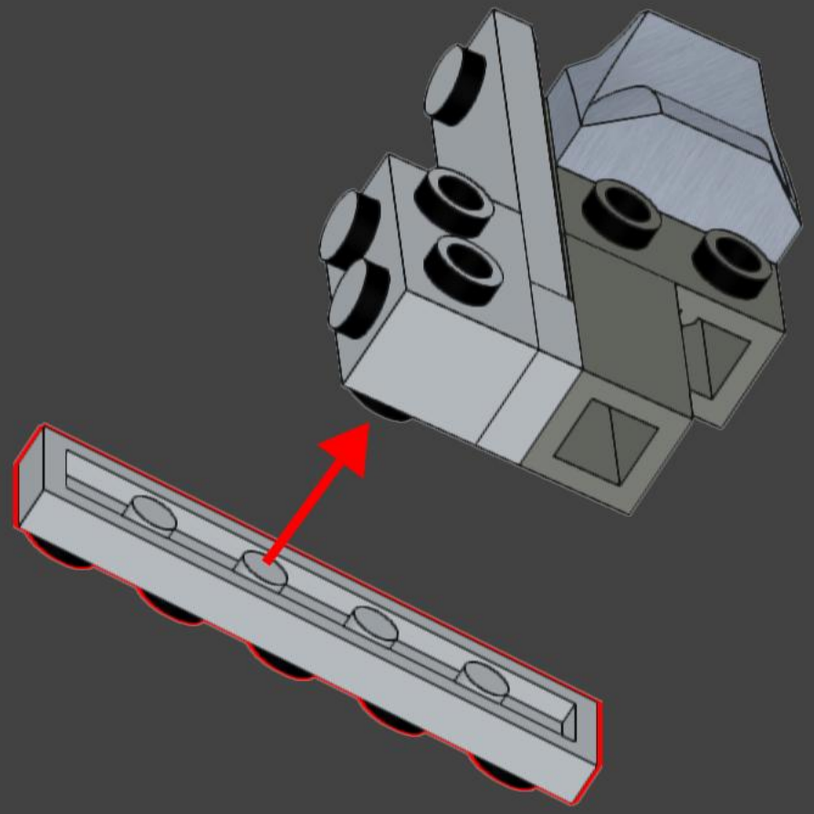

27

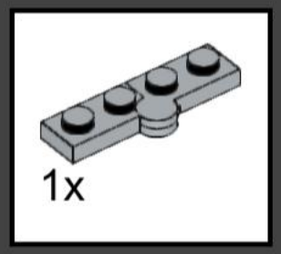

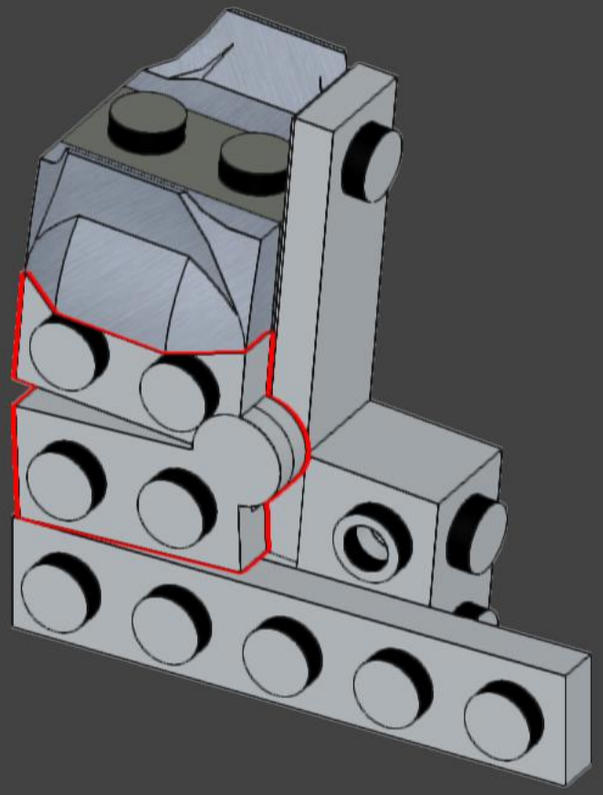

28

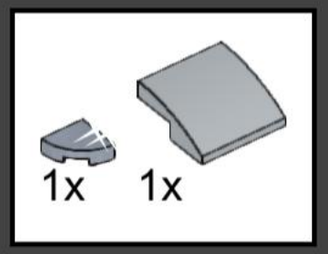

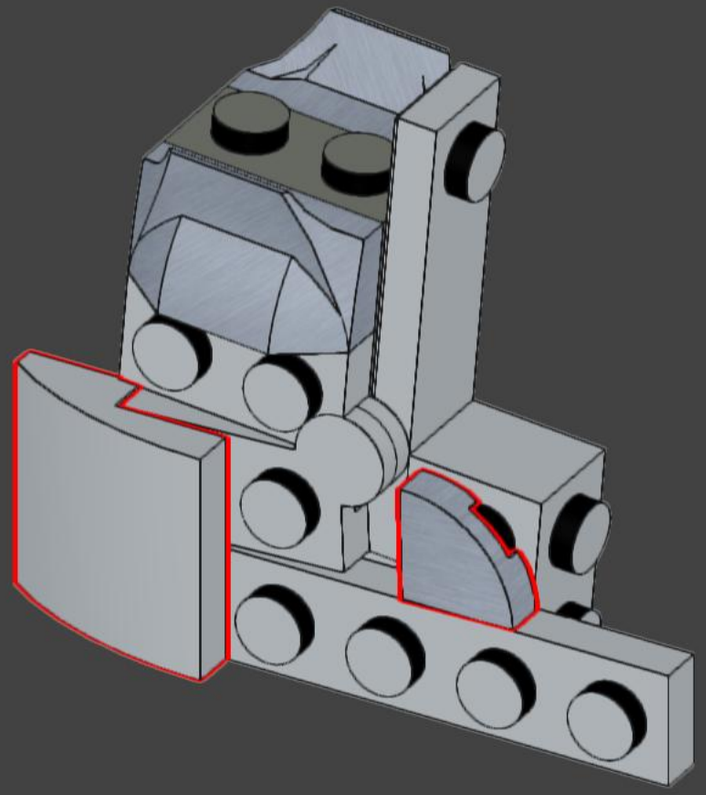

29

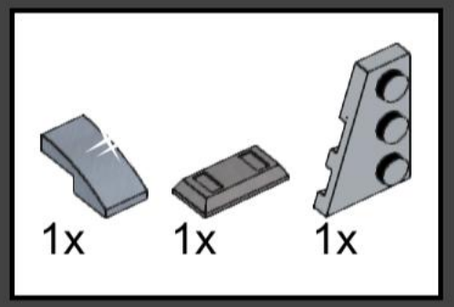

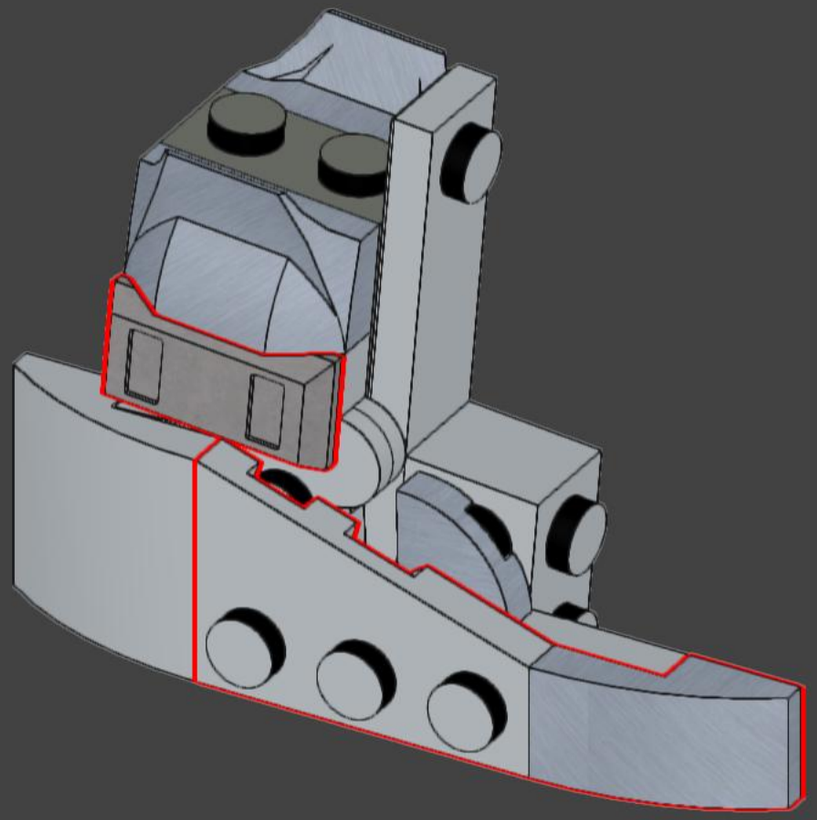

30

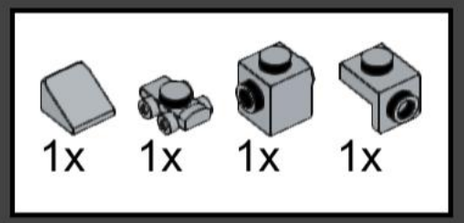

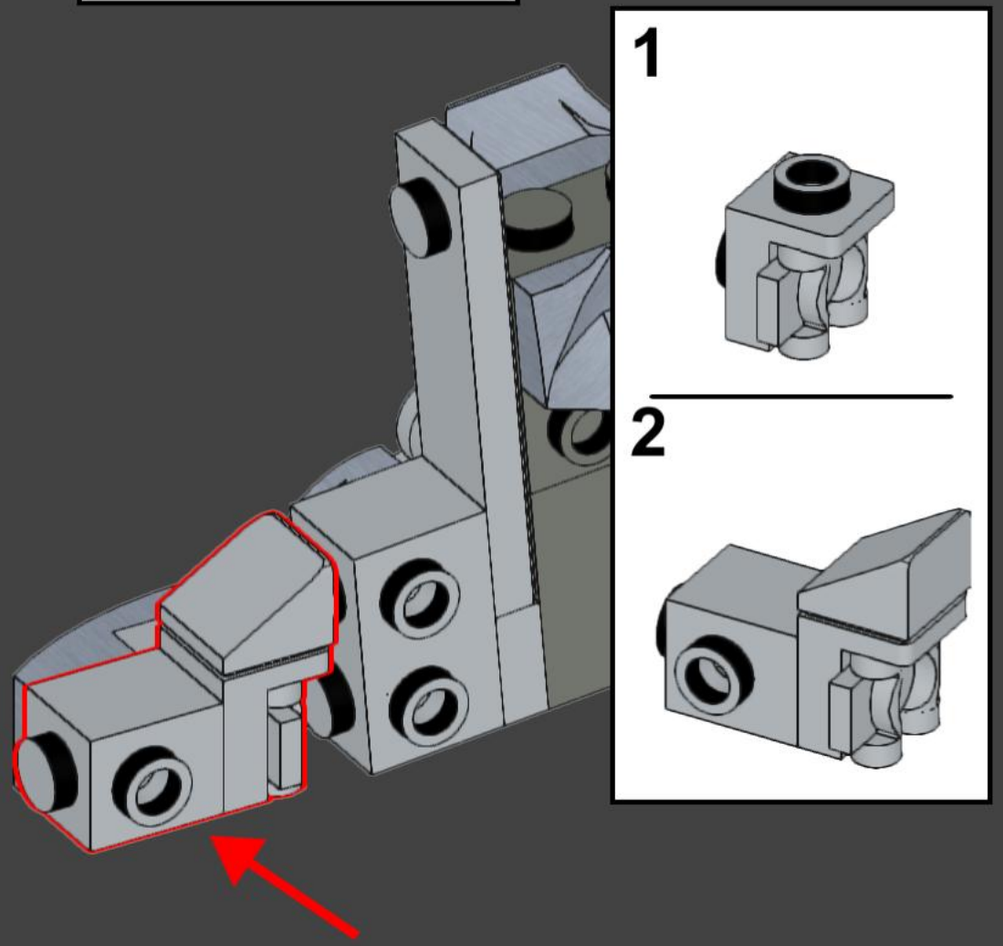

31

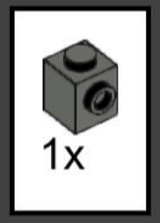

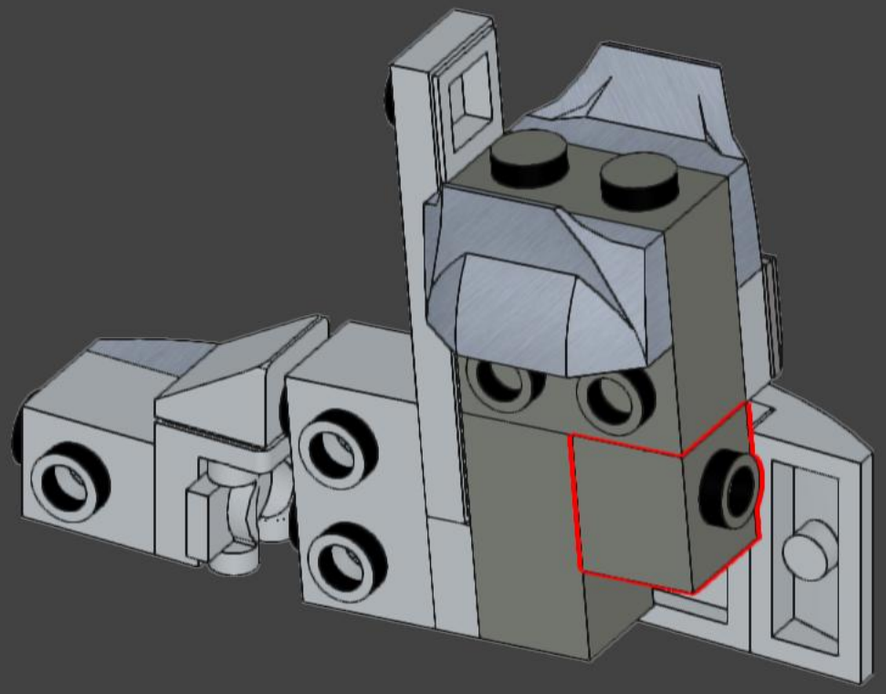

32

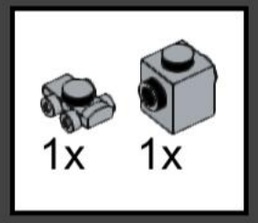

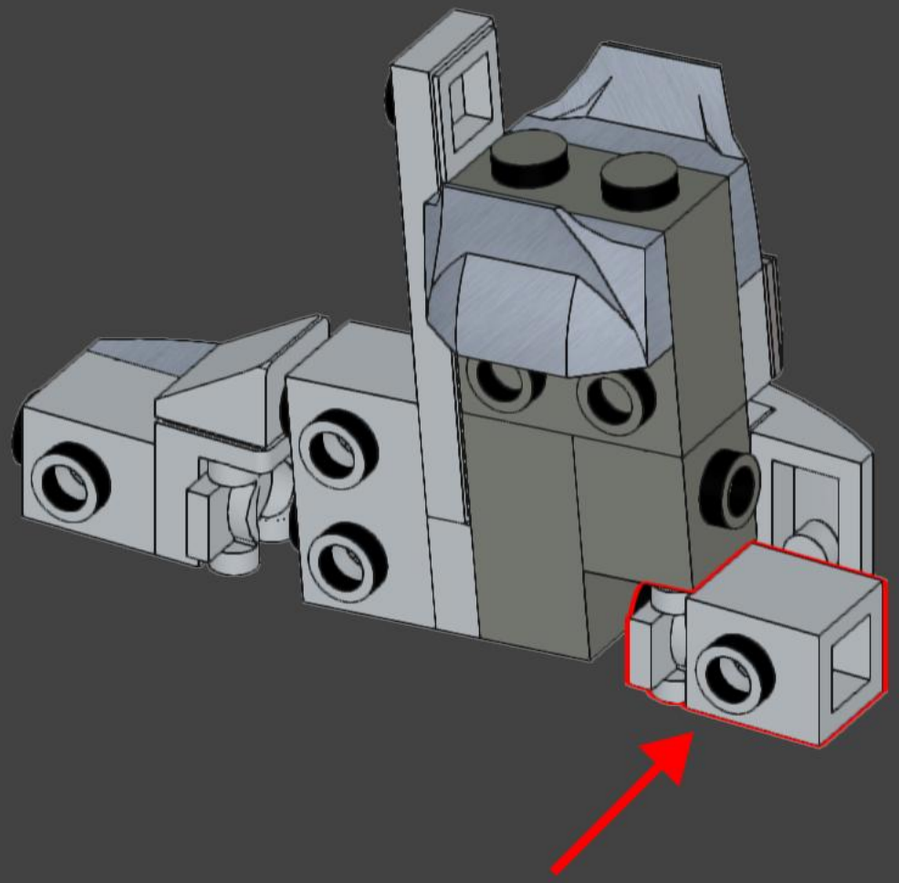

33

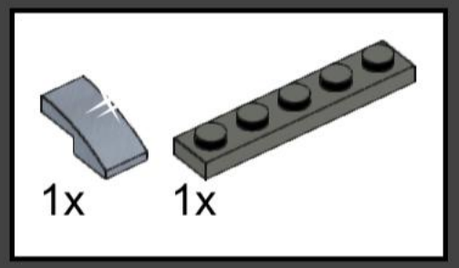

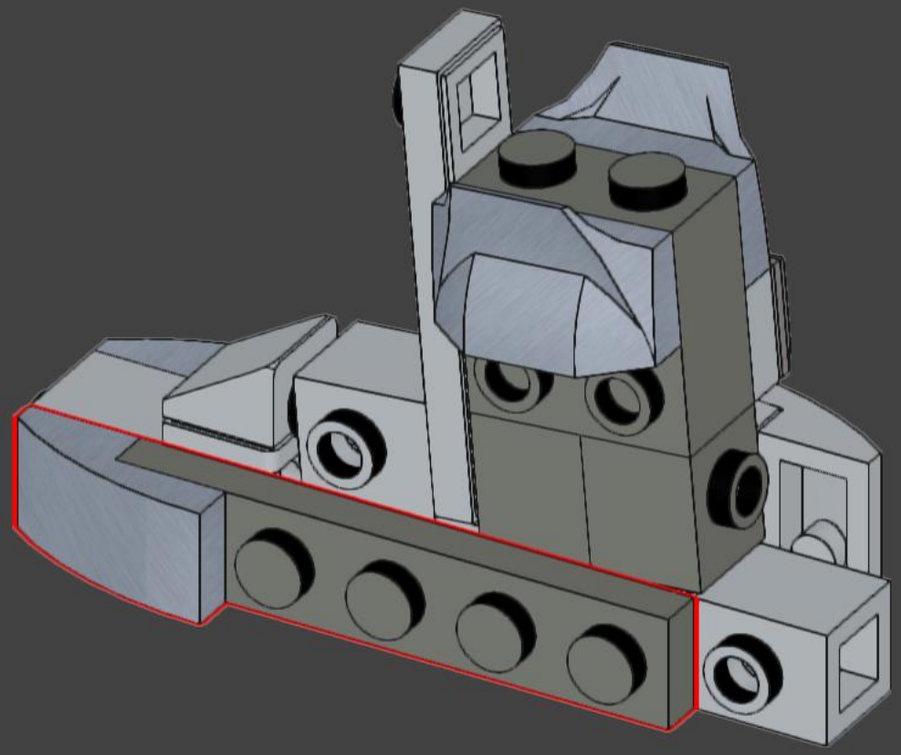

34

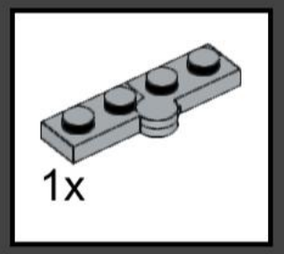

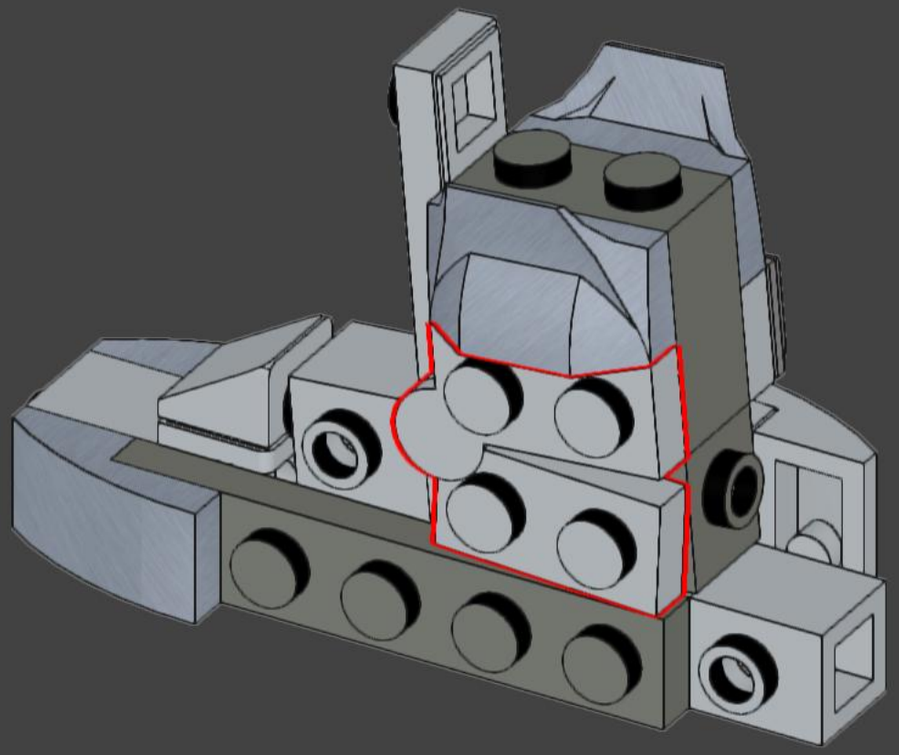

35

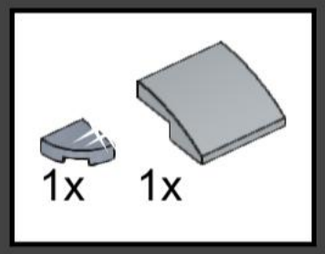

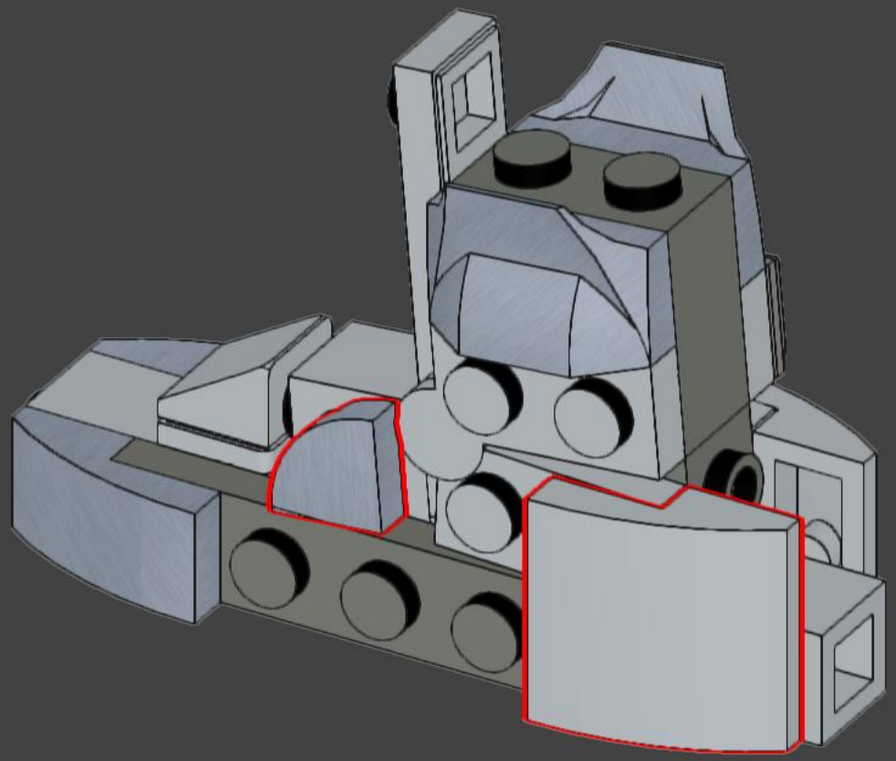

36

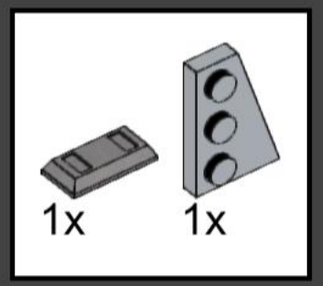

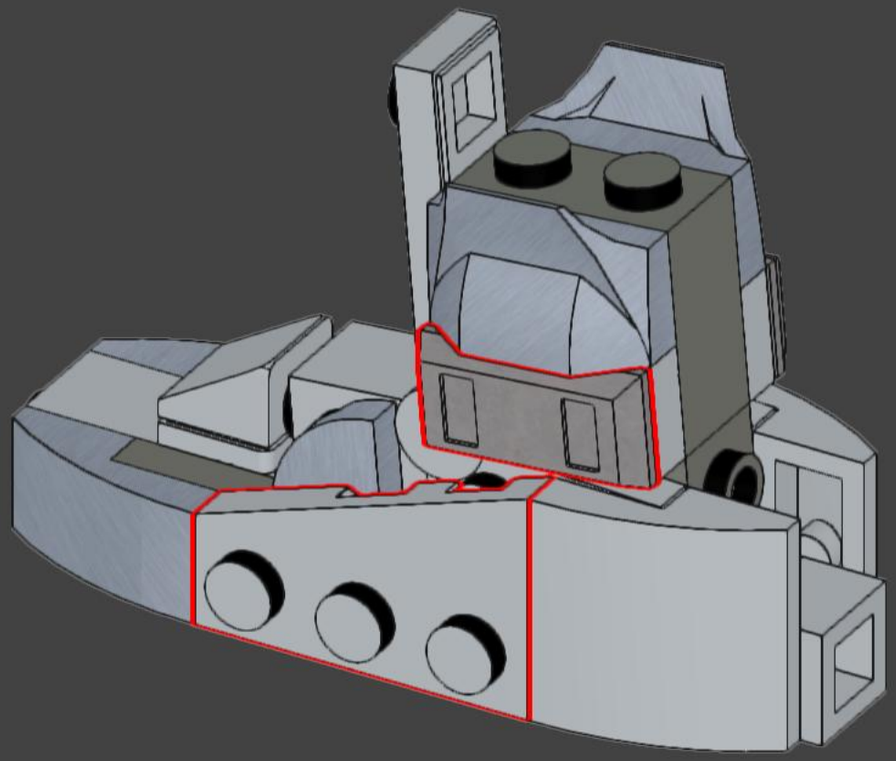

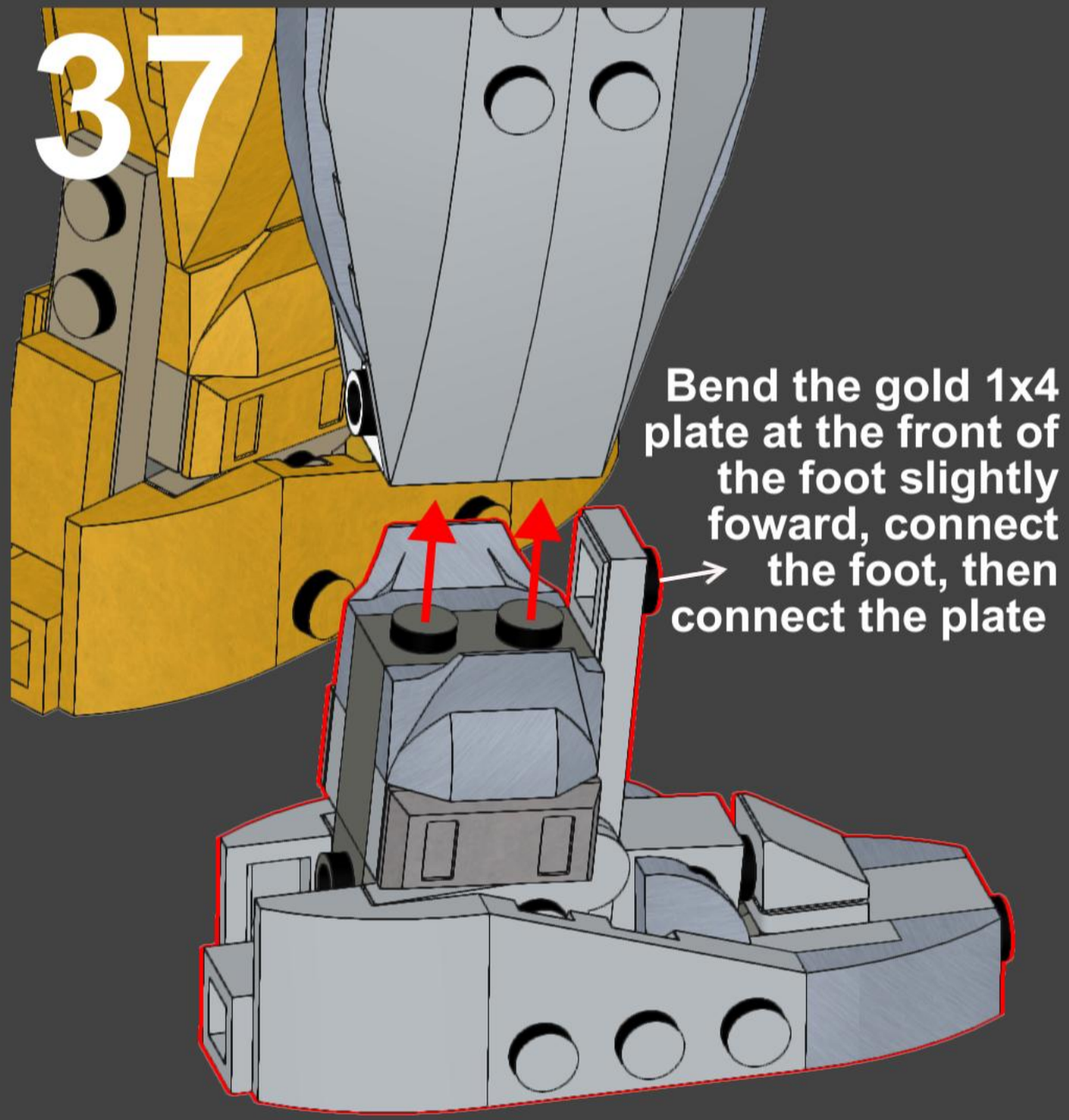
37
Bend the gold 1x4 plate at the front of the foot slightly foward, connect the foot, then connect the plate

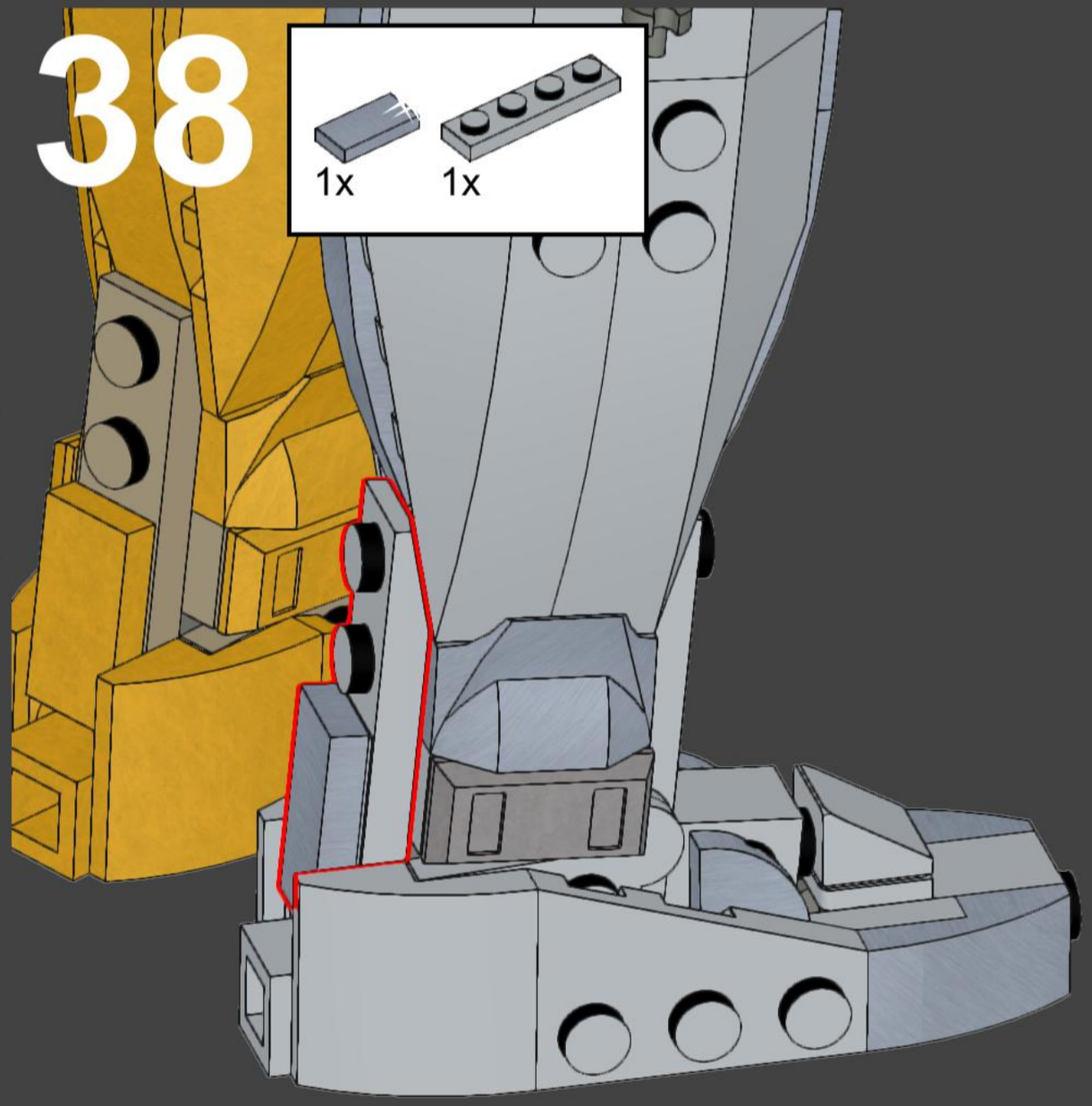
38
1x
1x

39

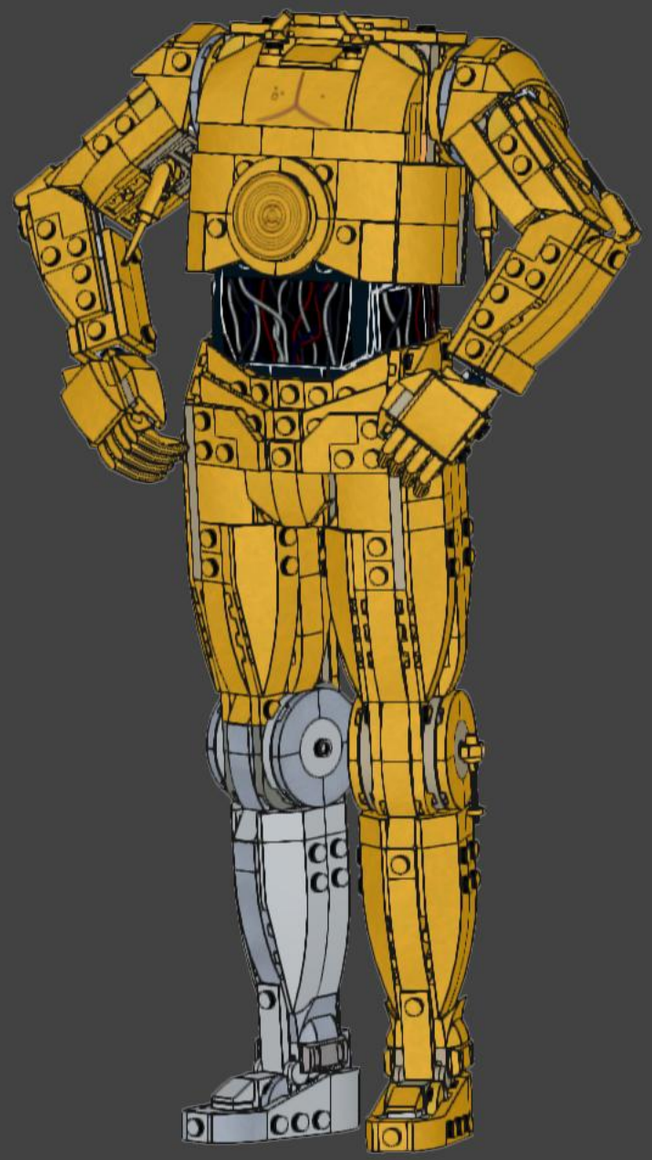

40

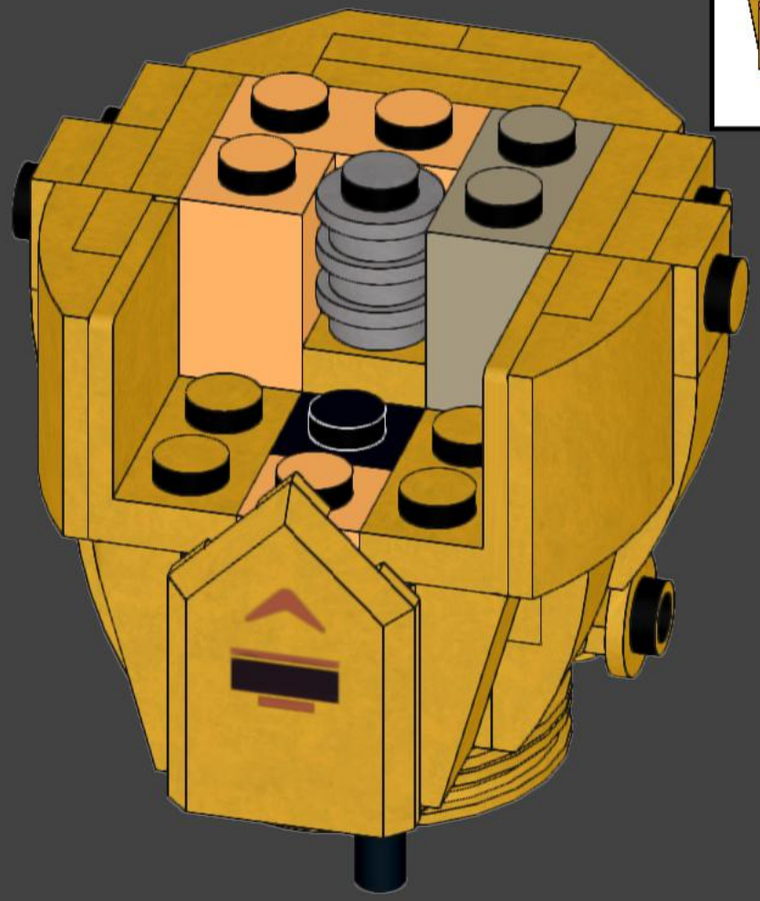

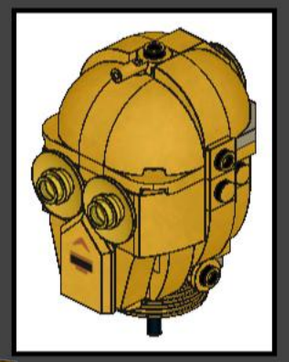

41

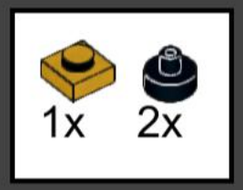

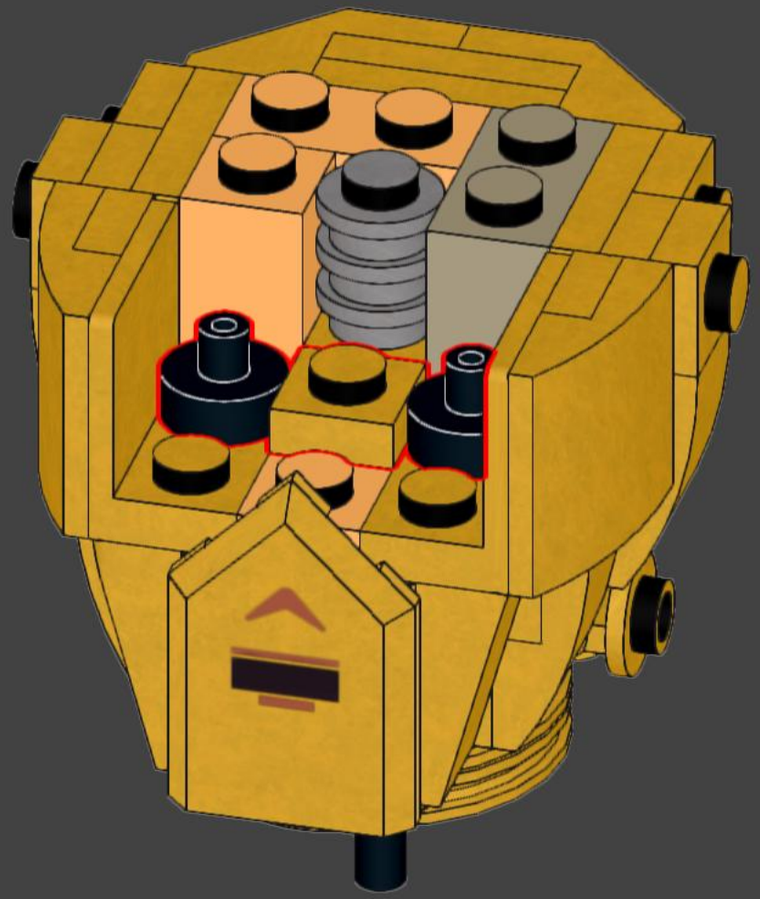

Remove the top of C-3PO's head, his eyes and the plates and modified bricks in the front area of the face.

42

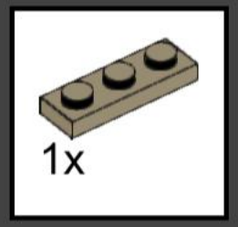

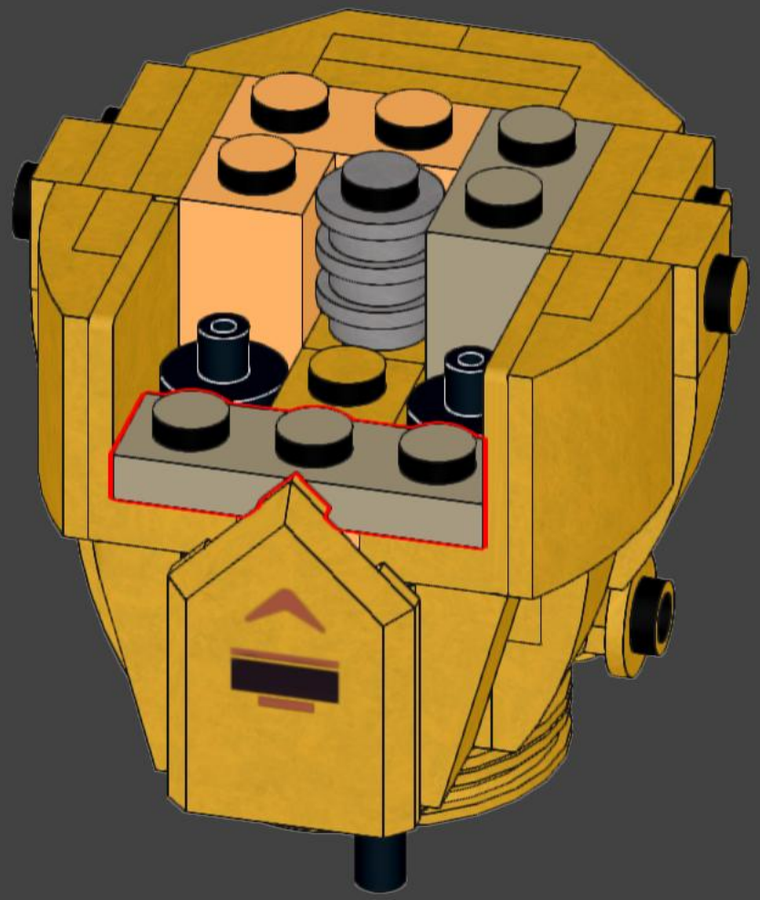

43

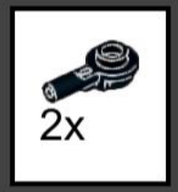

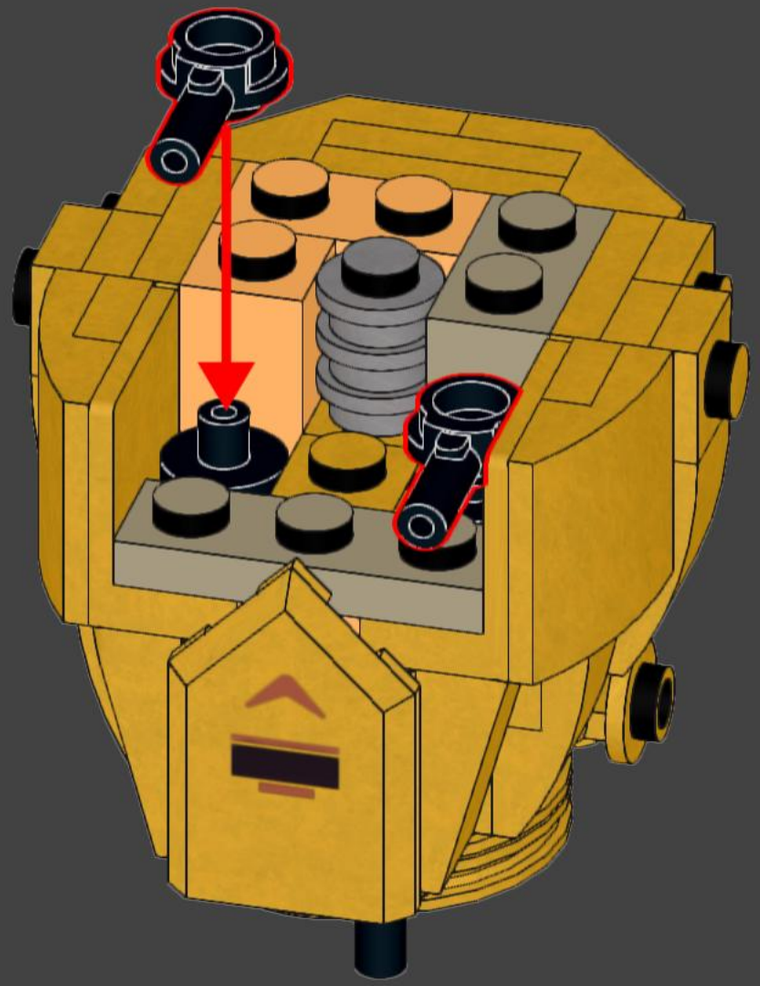

44

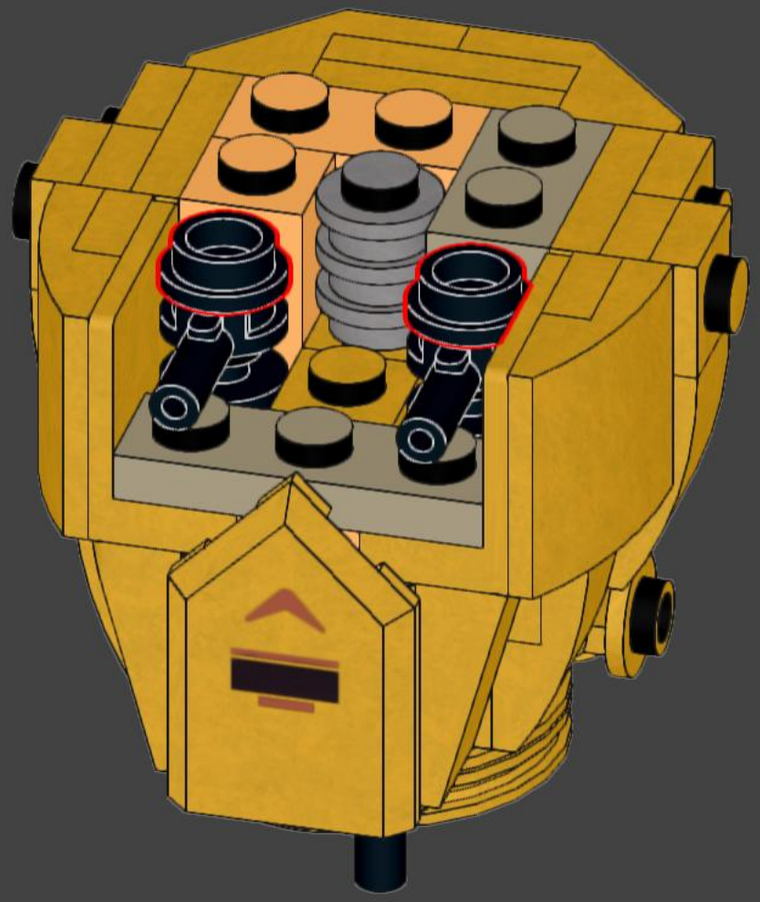

45

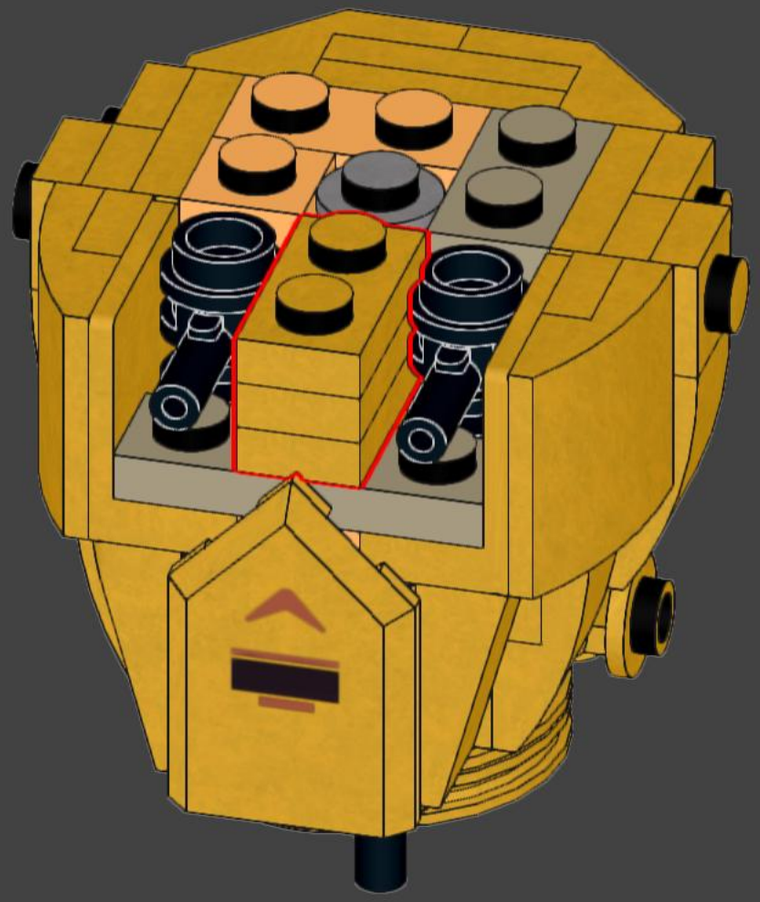

46

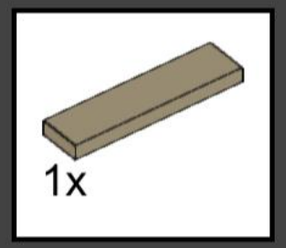

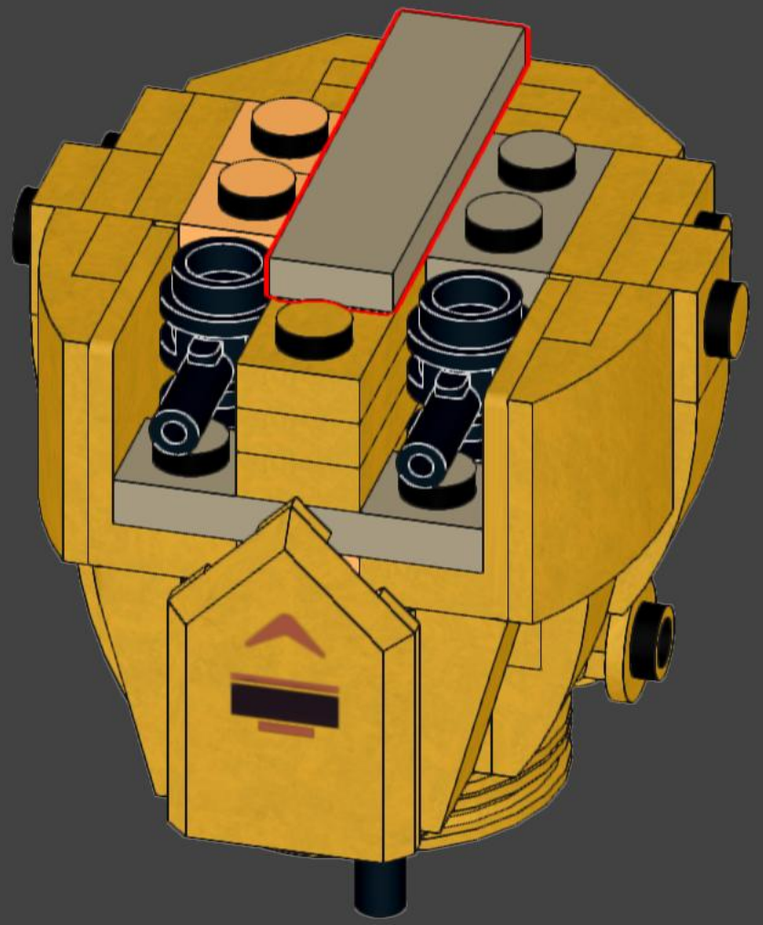

47

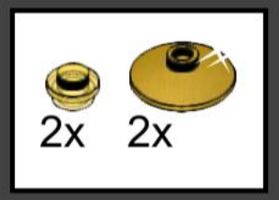

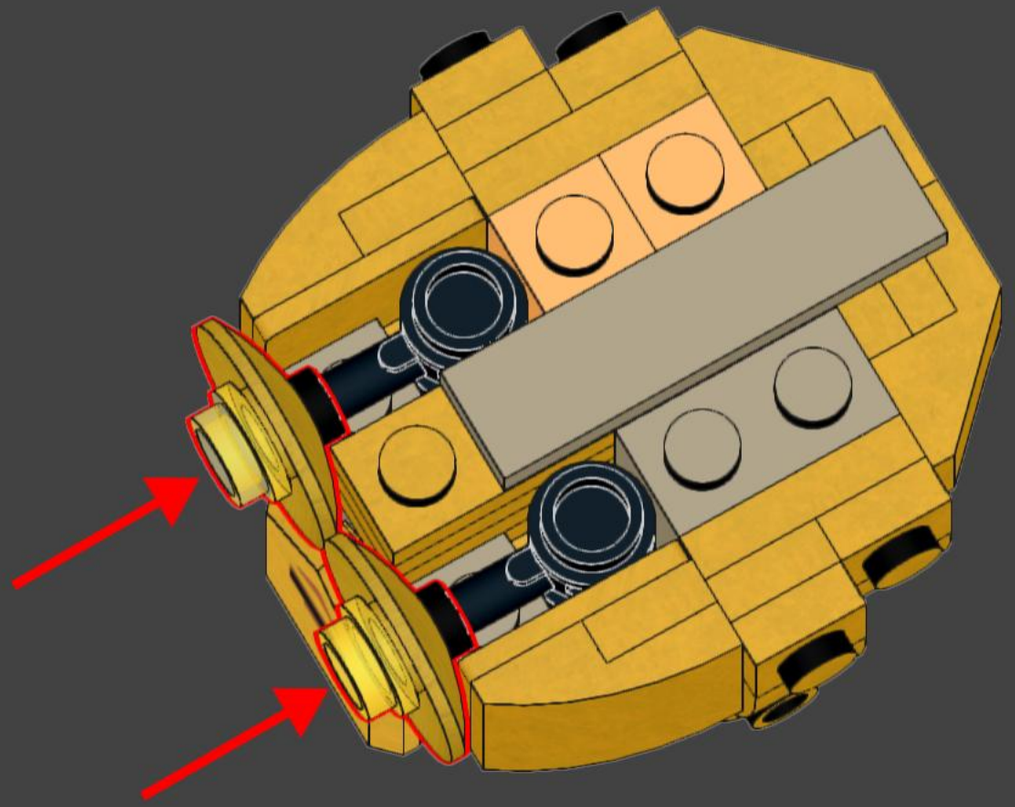

48

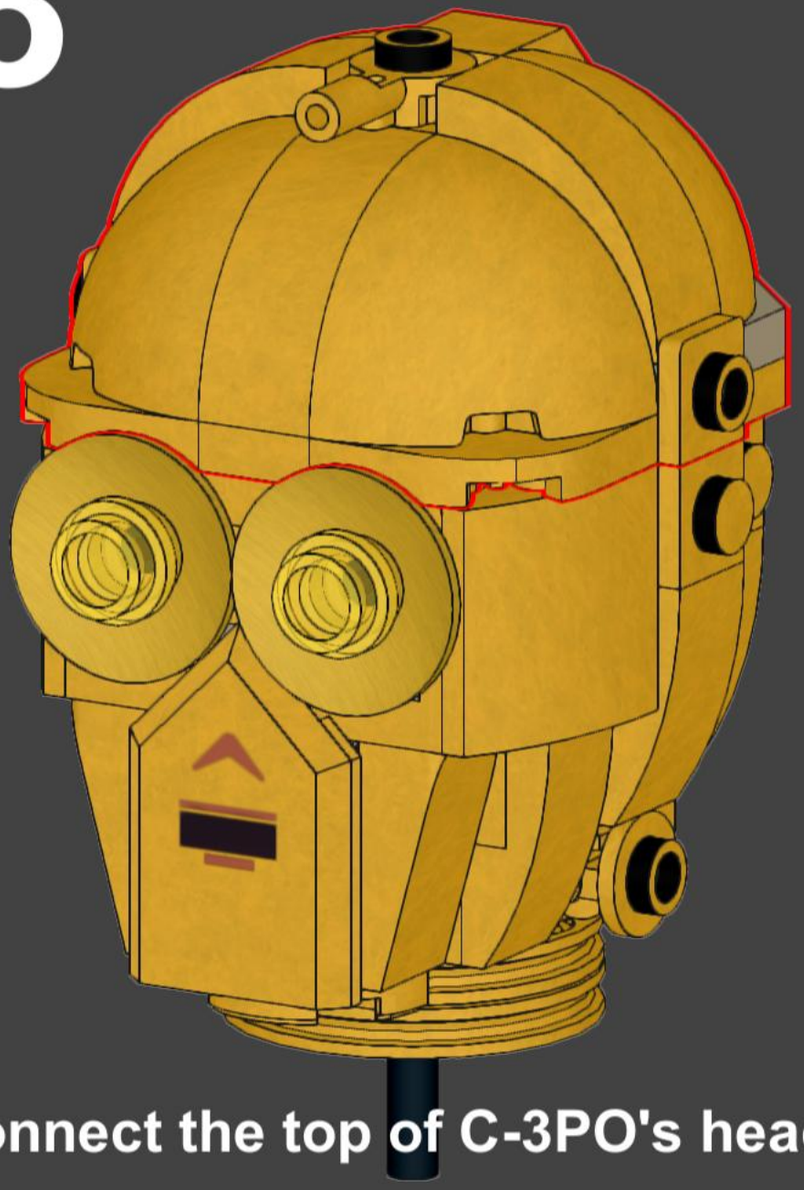

Reconnect the top of C-3PO's head.

49

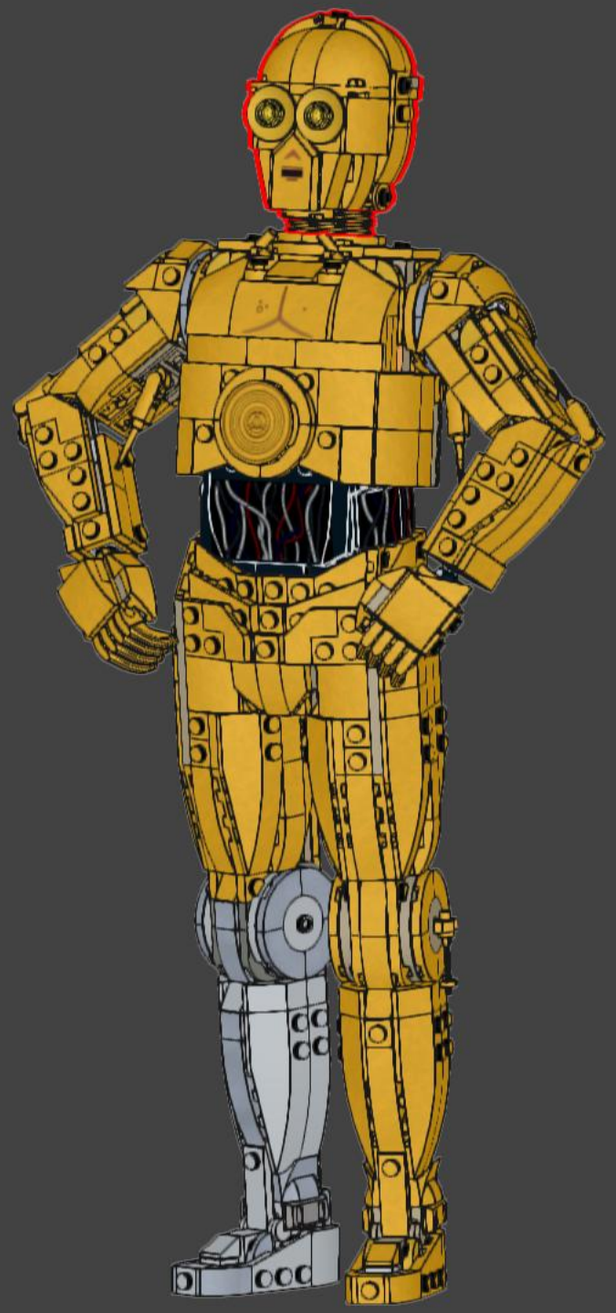

v1.0

BriXpando

brixpando.com