Instructions & Design provided by:

Anleitung & Design erstellt von:

Ron_McPhatty

Rebrickable

https://rebrickable.com/users/ron_mcphatty/mocs/

Instagram

https://www.instagram.com/ron_mcphatty/?hl=de

Expansion packs brought to you by:

BriXpando

R2-D2
ASTROMECH

75379 MOD
INSTRUCTIONS BY
RON_MCPHATTY

1

For this modification of set 75379 you will need the following extra pieces

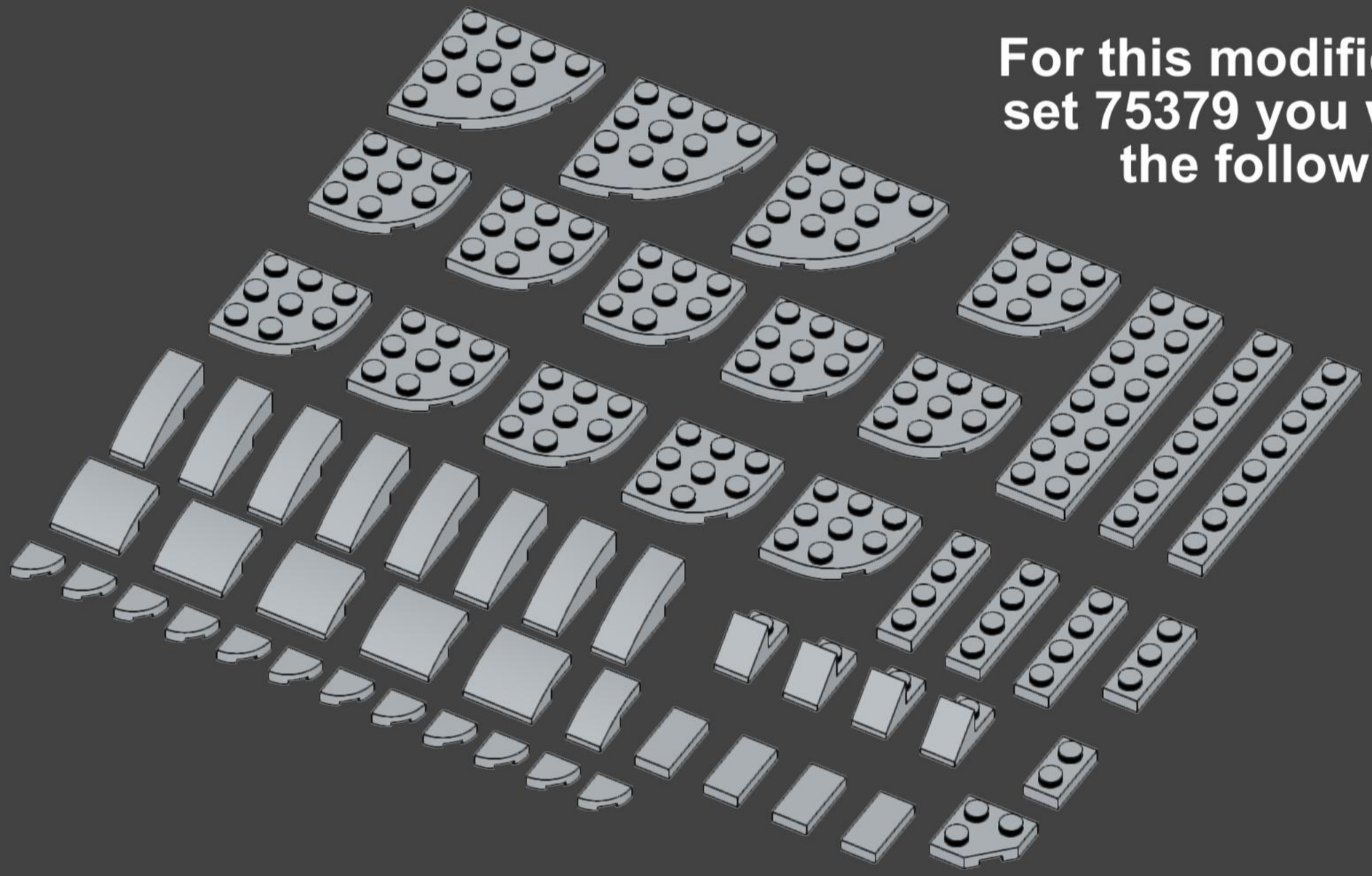

v1.0

2

Build R2-D2 and remove his head

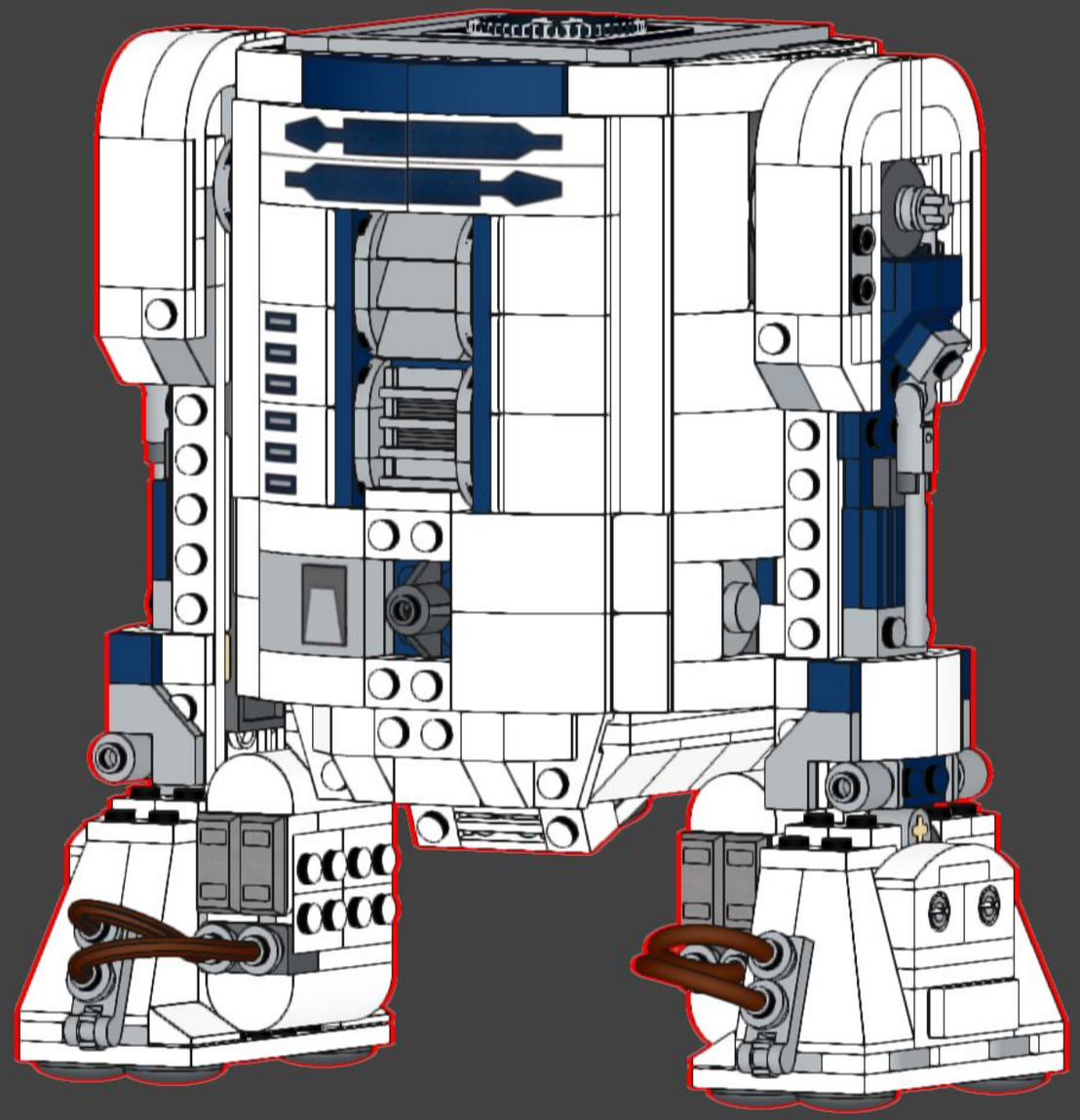

3

Remove all side and top pieces until this structure remains (step 167 in the original instructions).

Disassemble the rest, some parts will be reused.

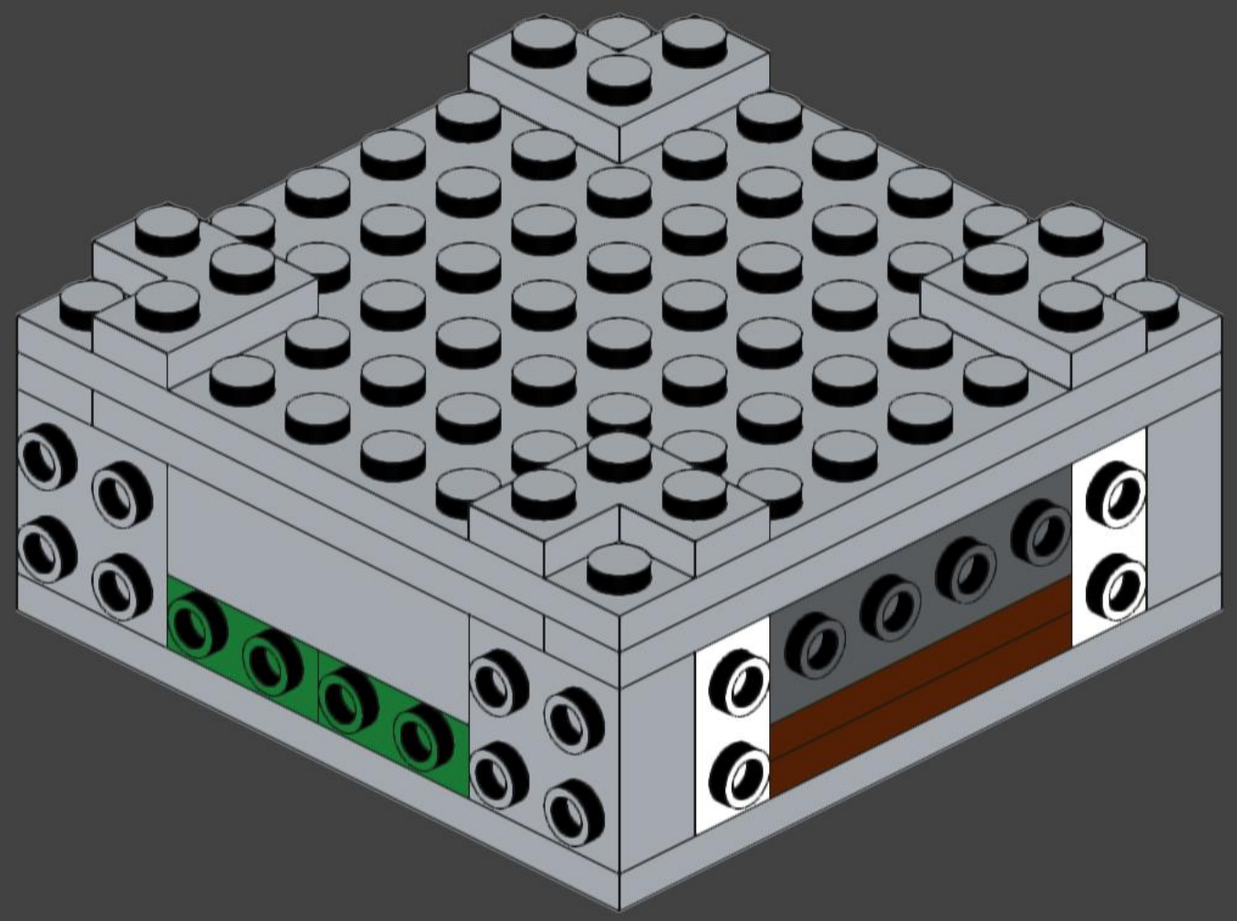

4

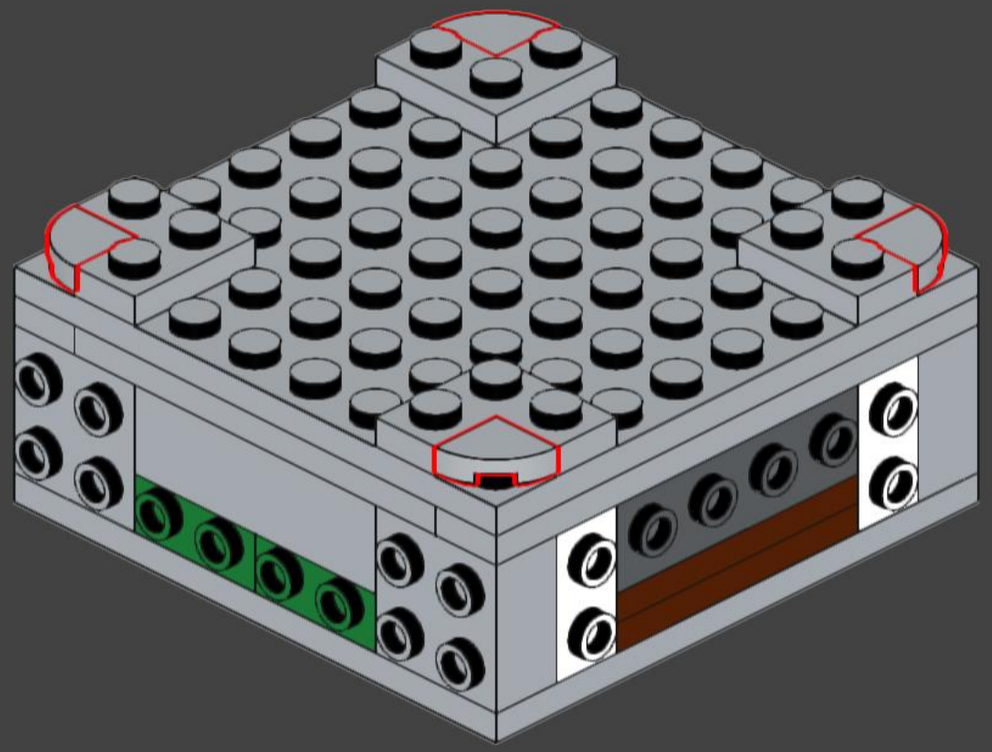

5

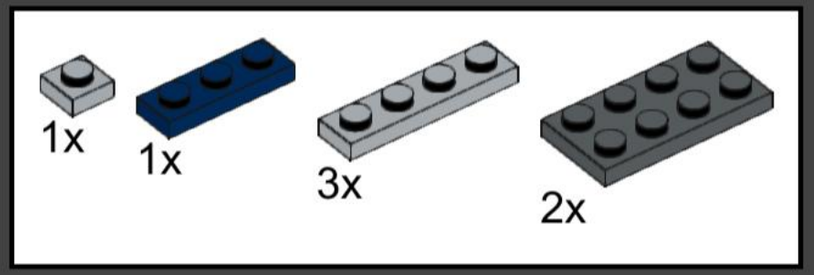

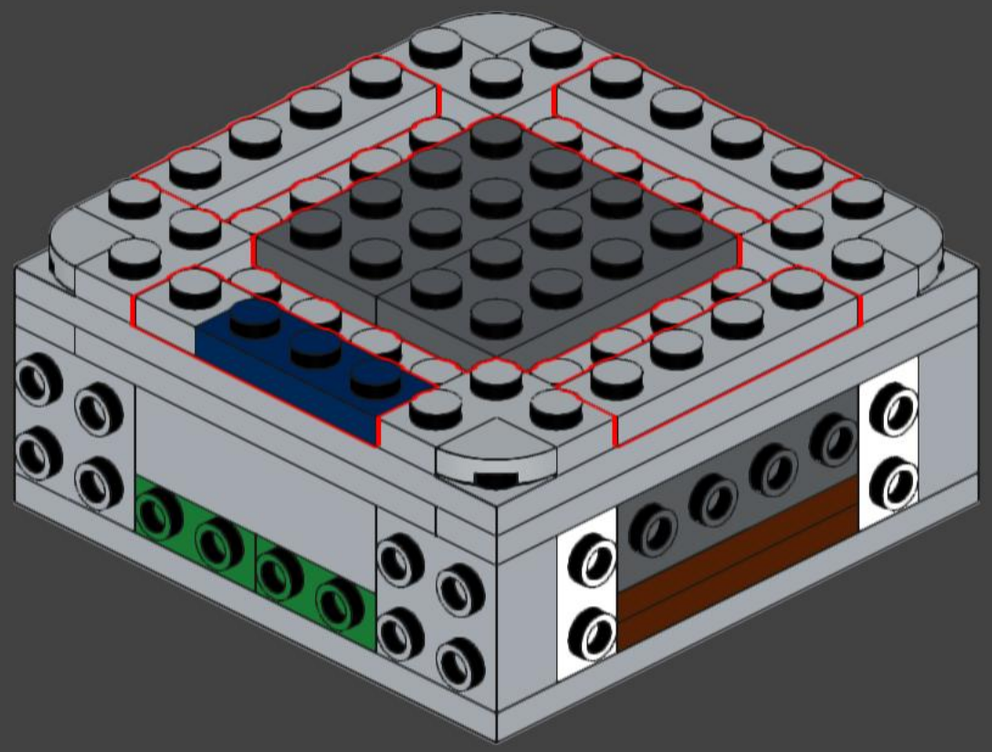

6

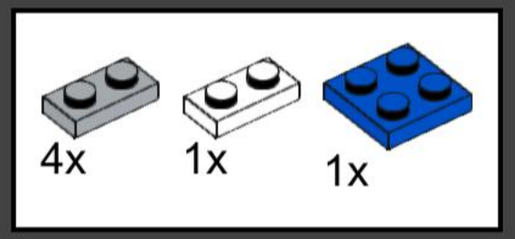

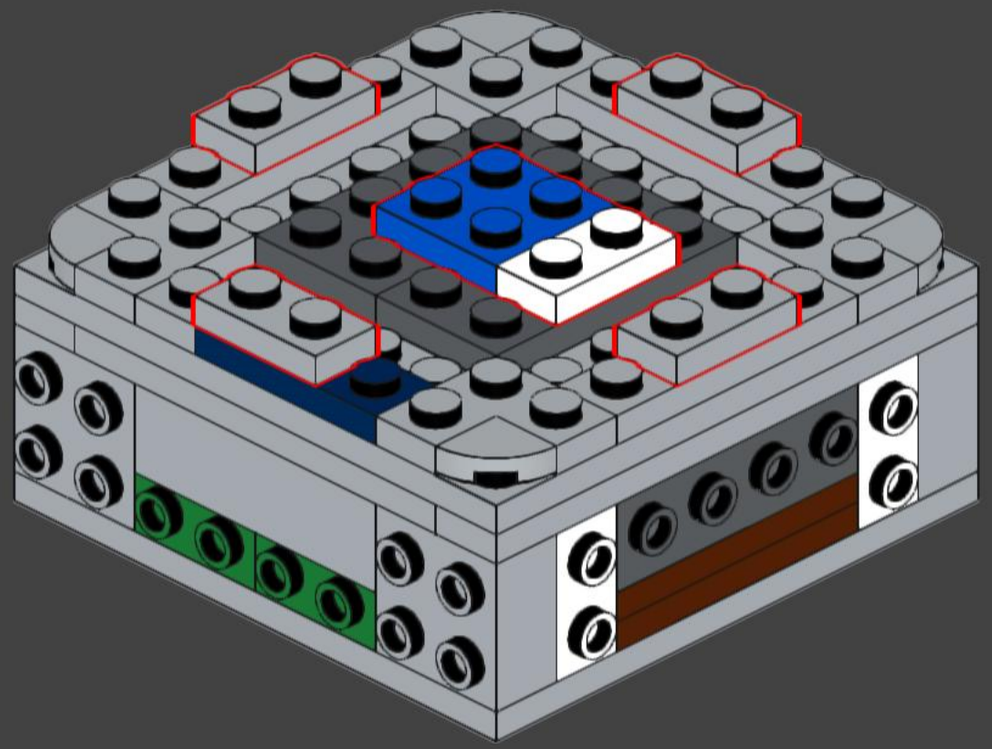

7

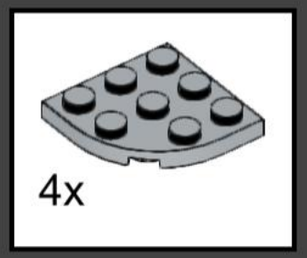

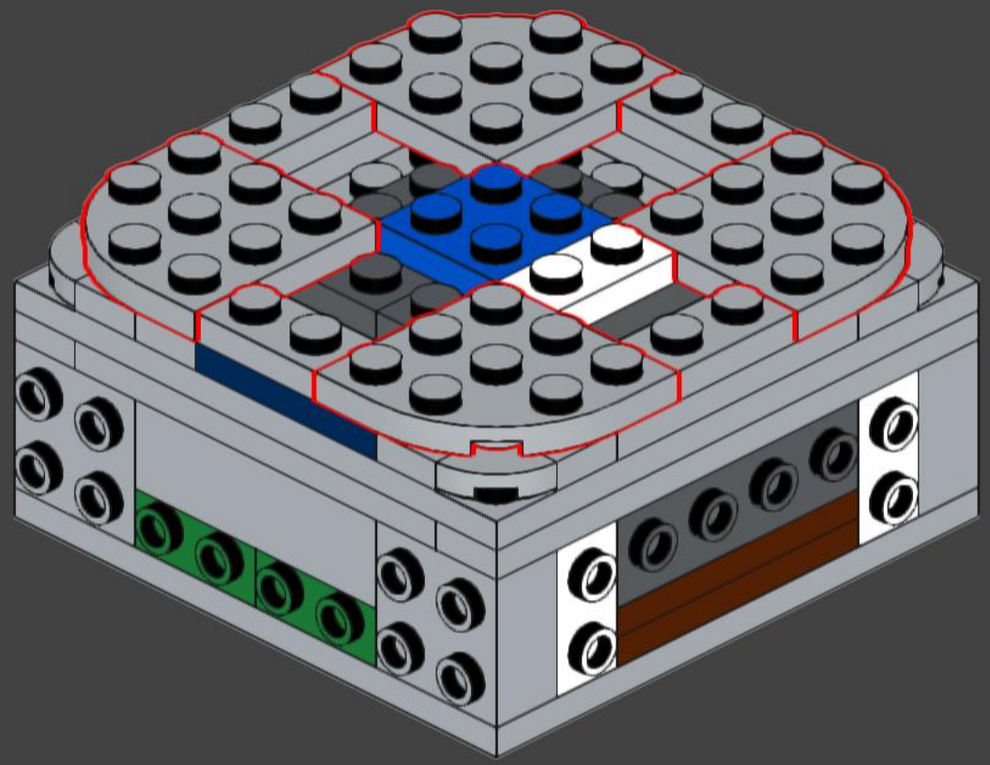

8

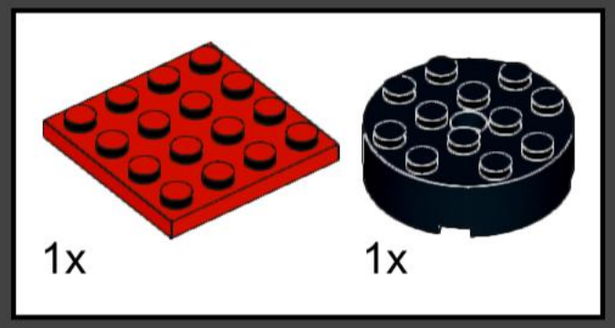

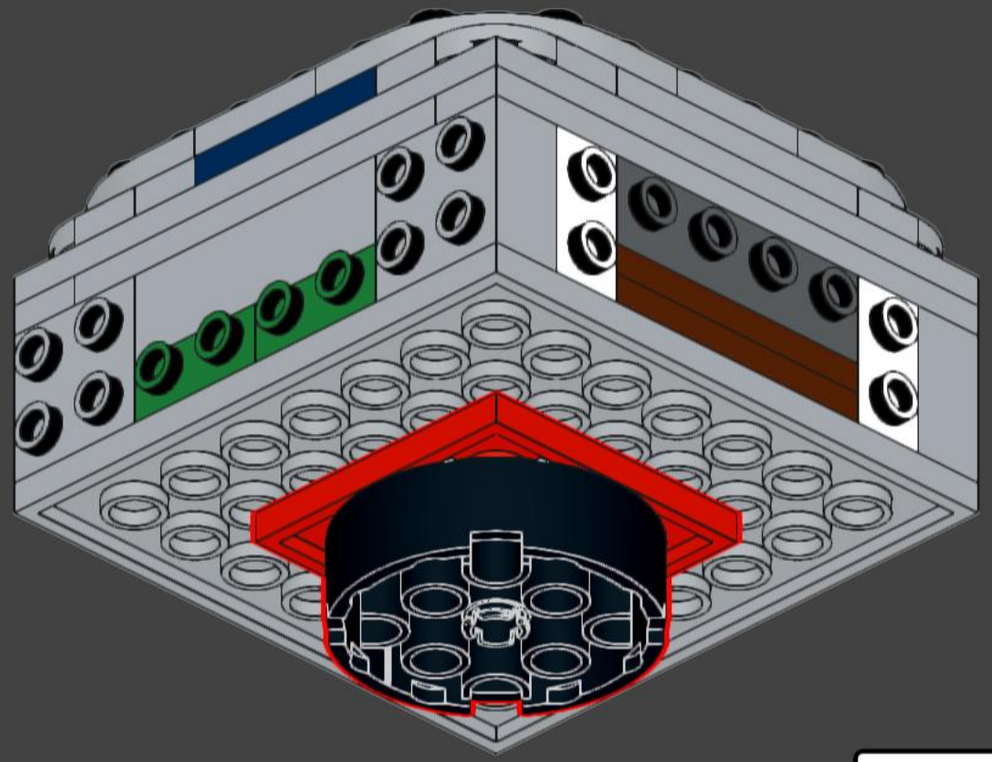

9

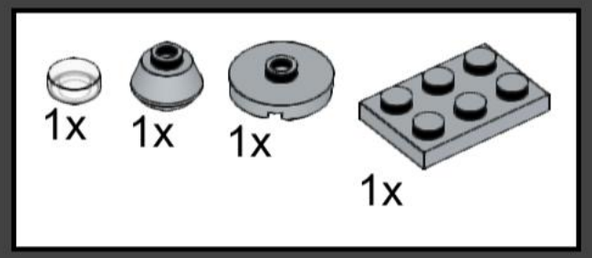

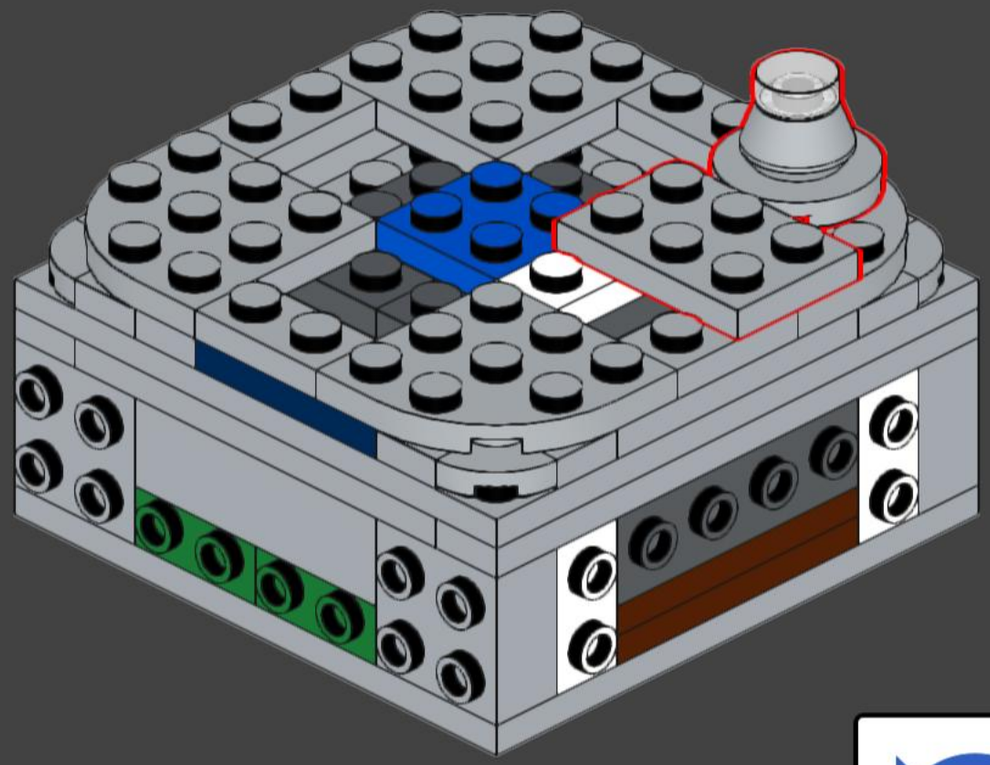

10

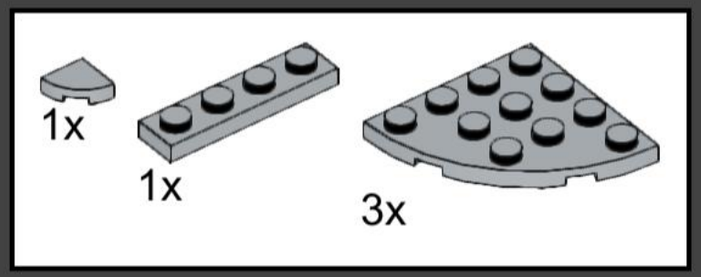

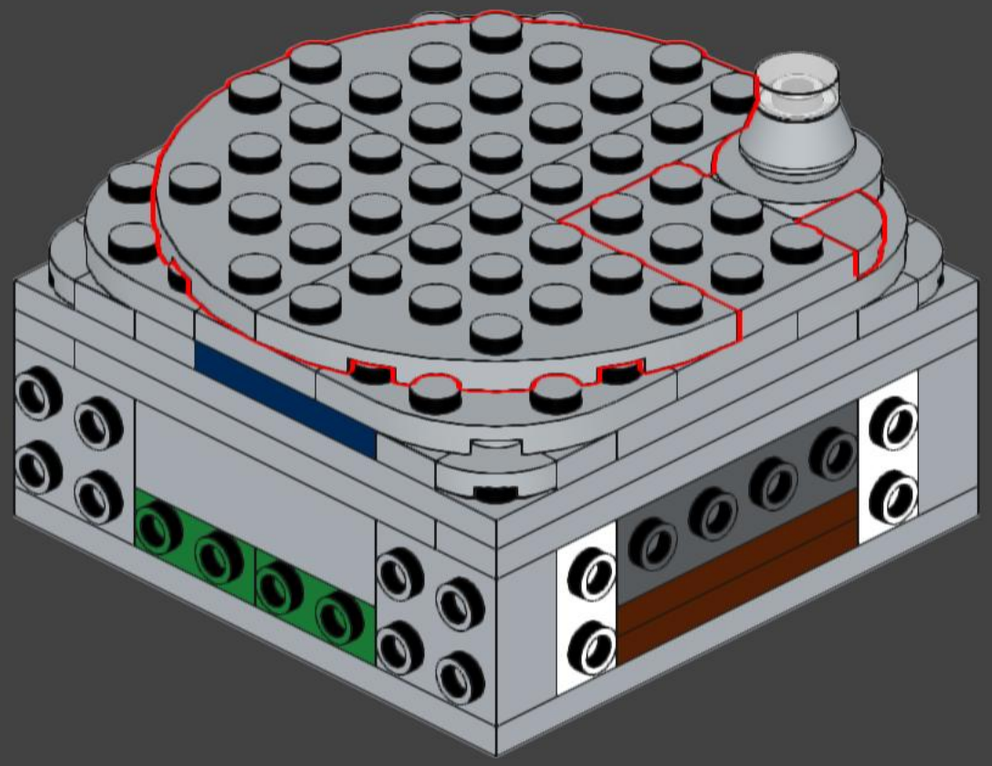

11

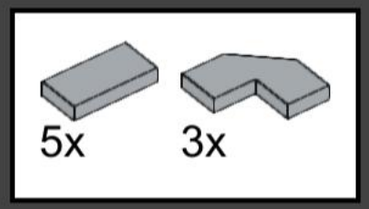

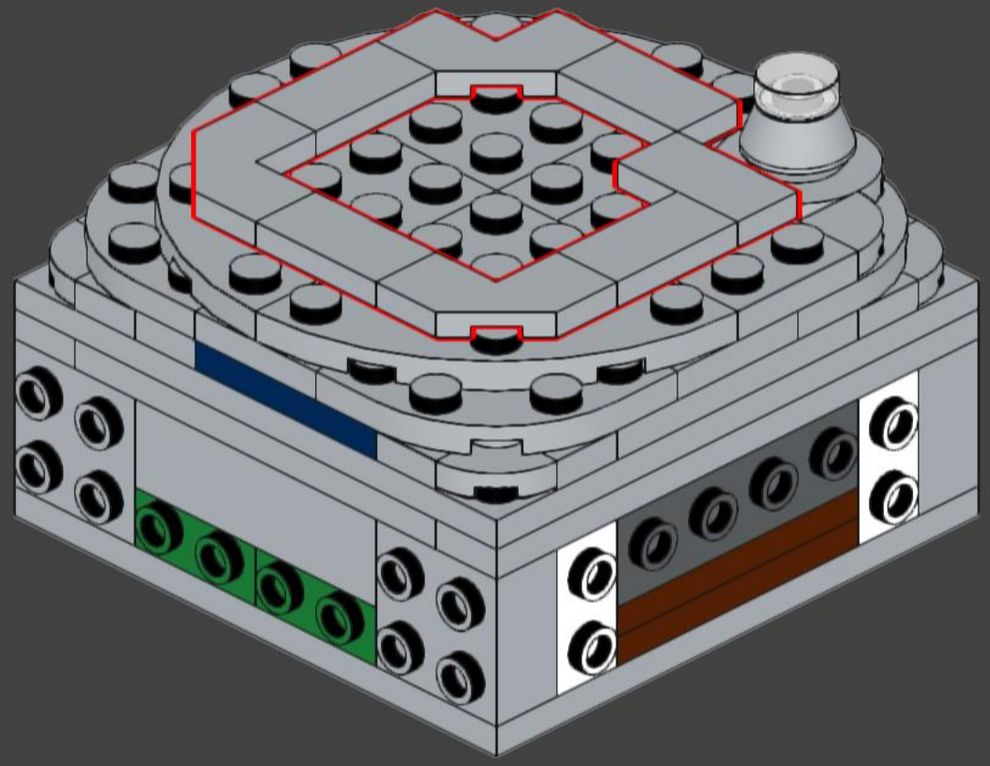

12

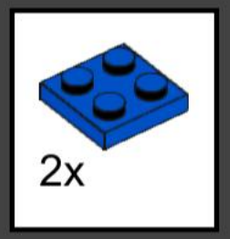

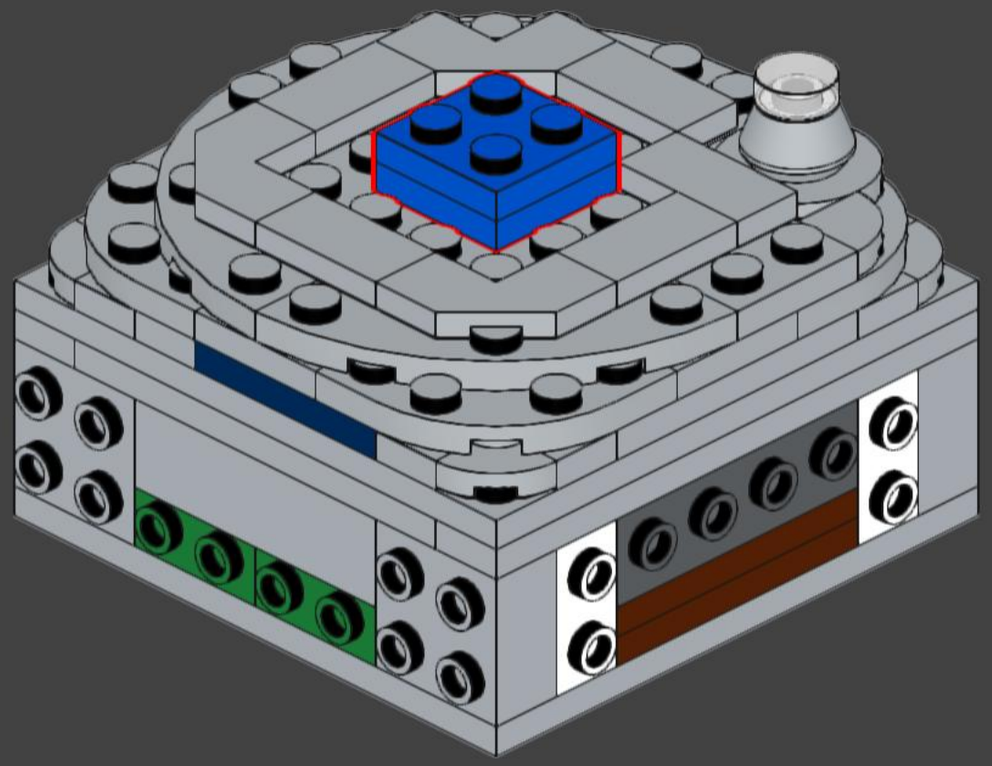

13

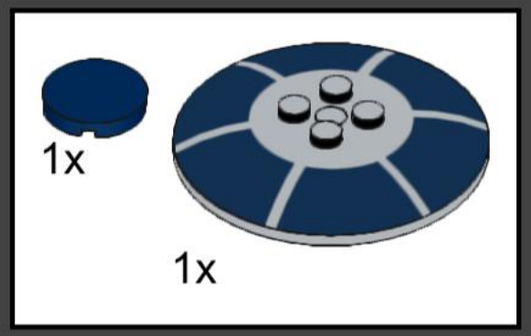

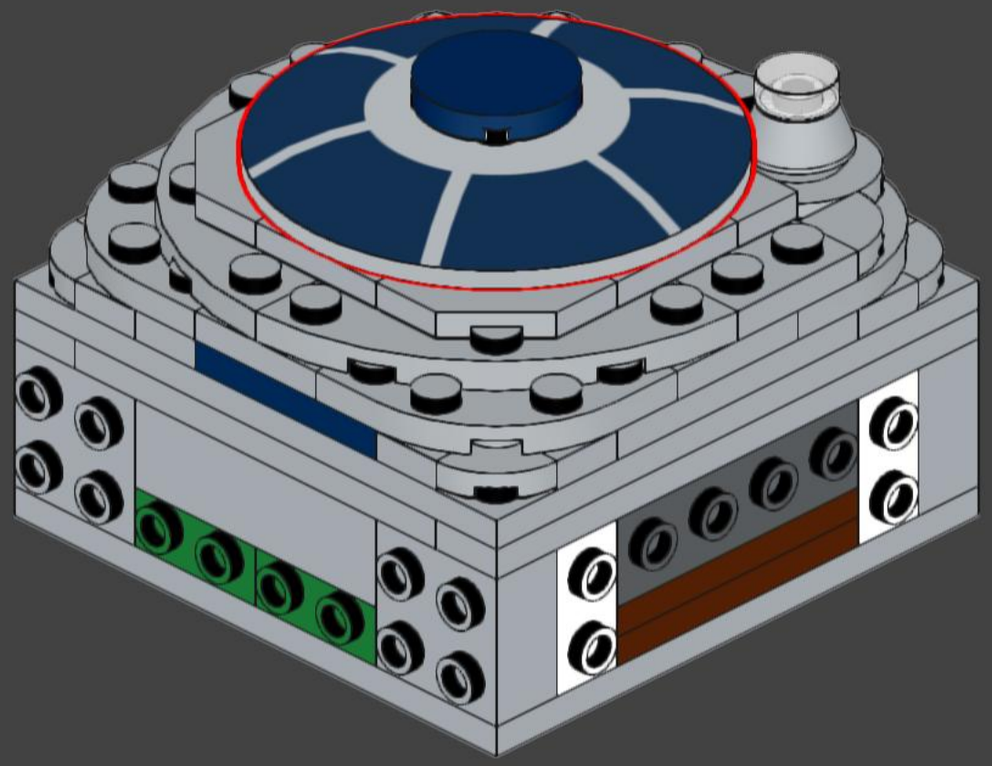

14

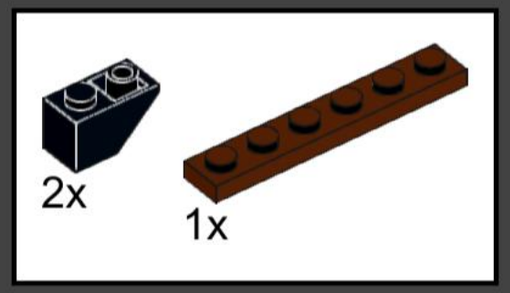

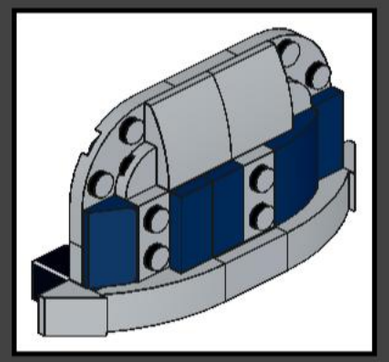

15

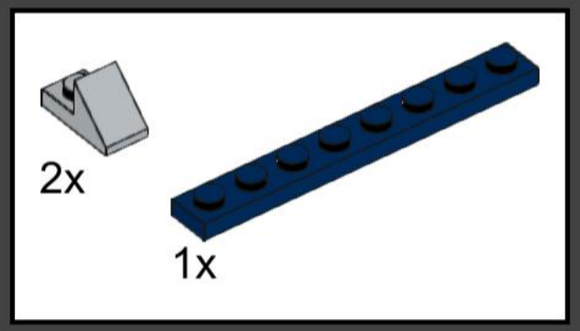

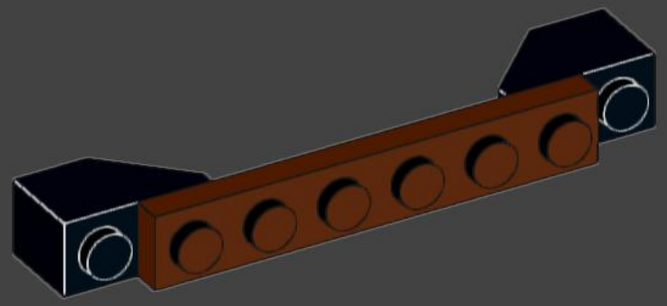

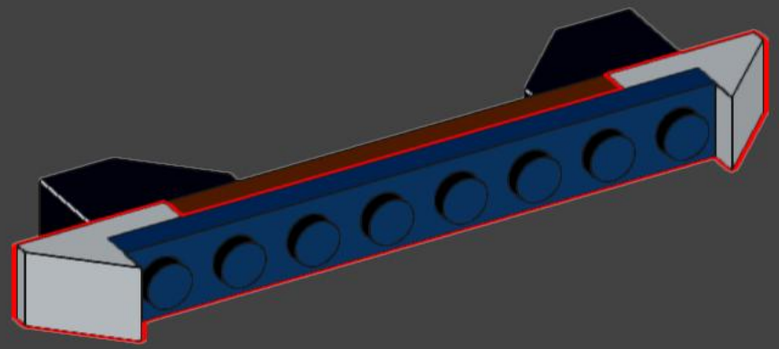

16

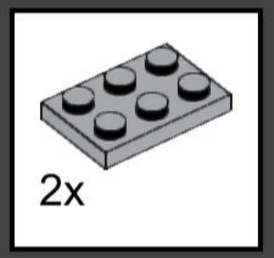

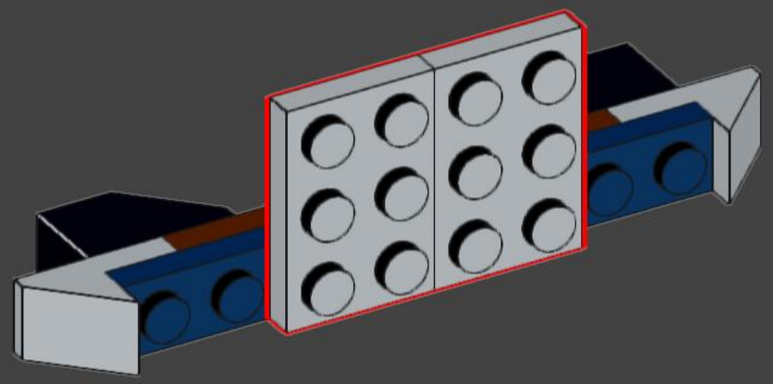

17

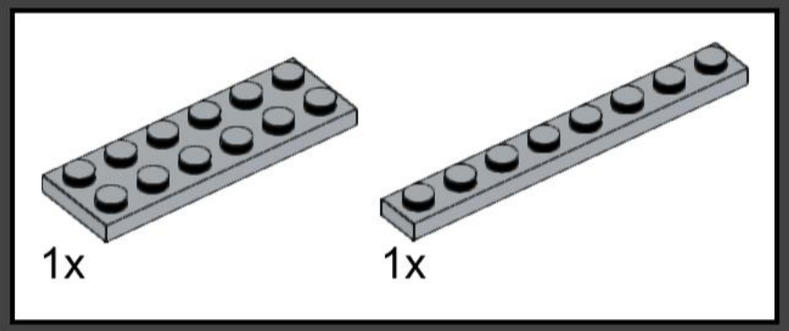

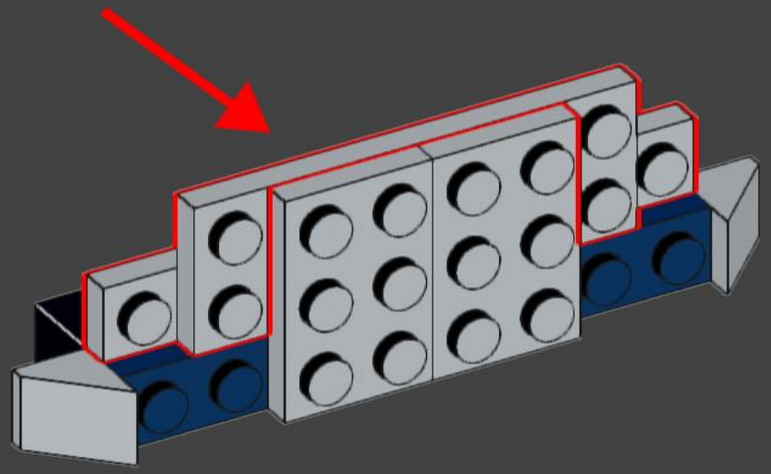

18

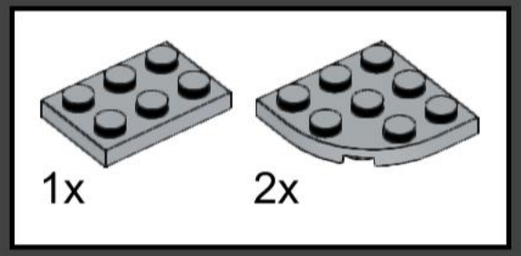

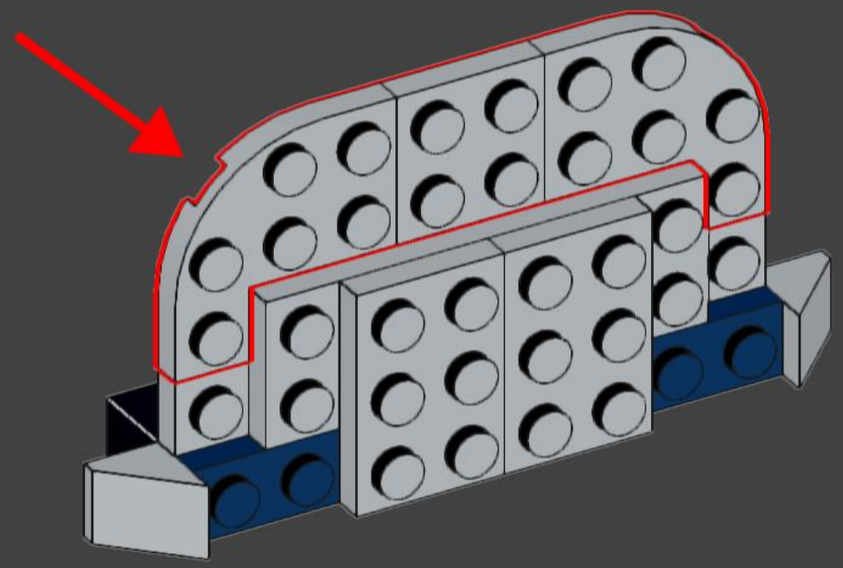

19

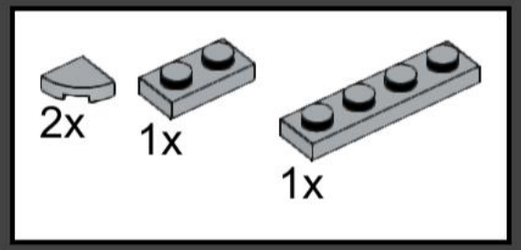

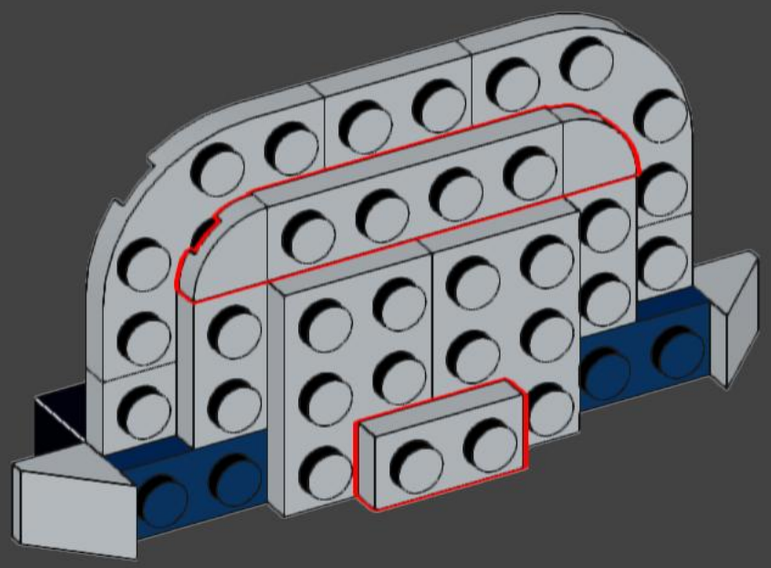

20

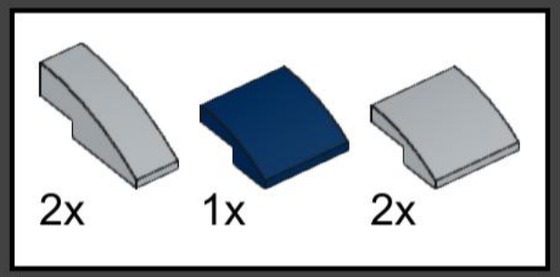

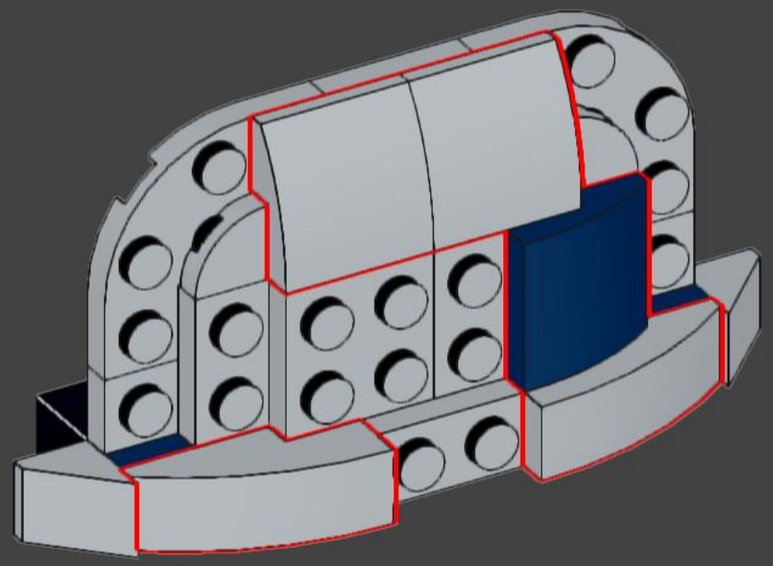

21

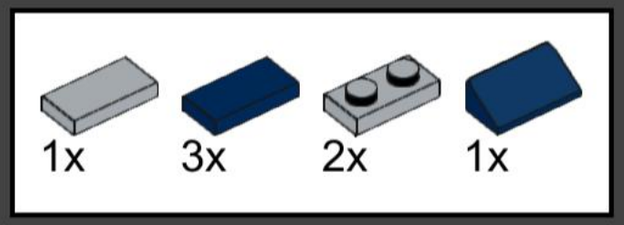

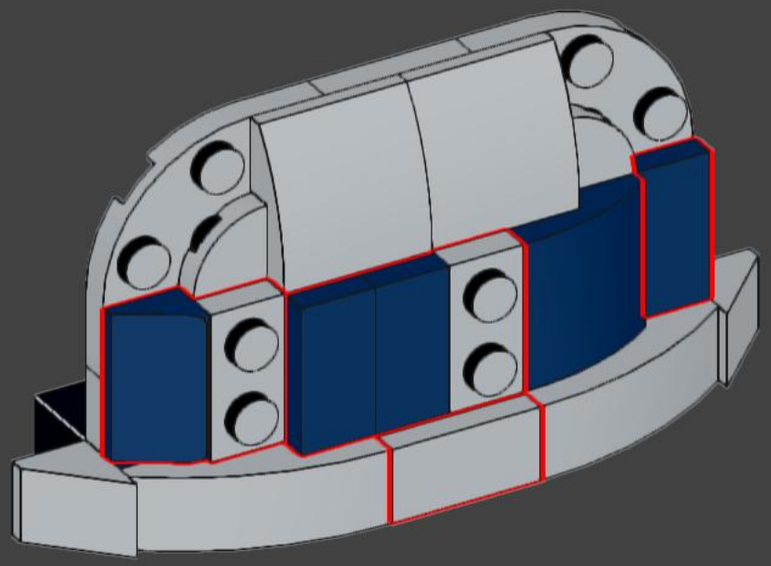

22

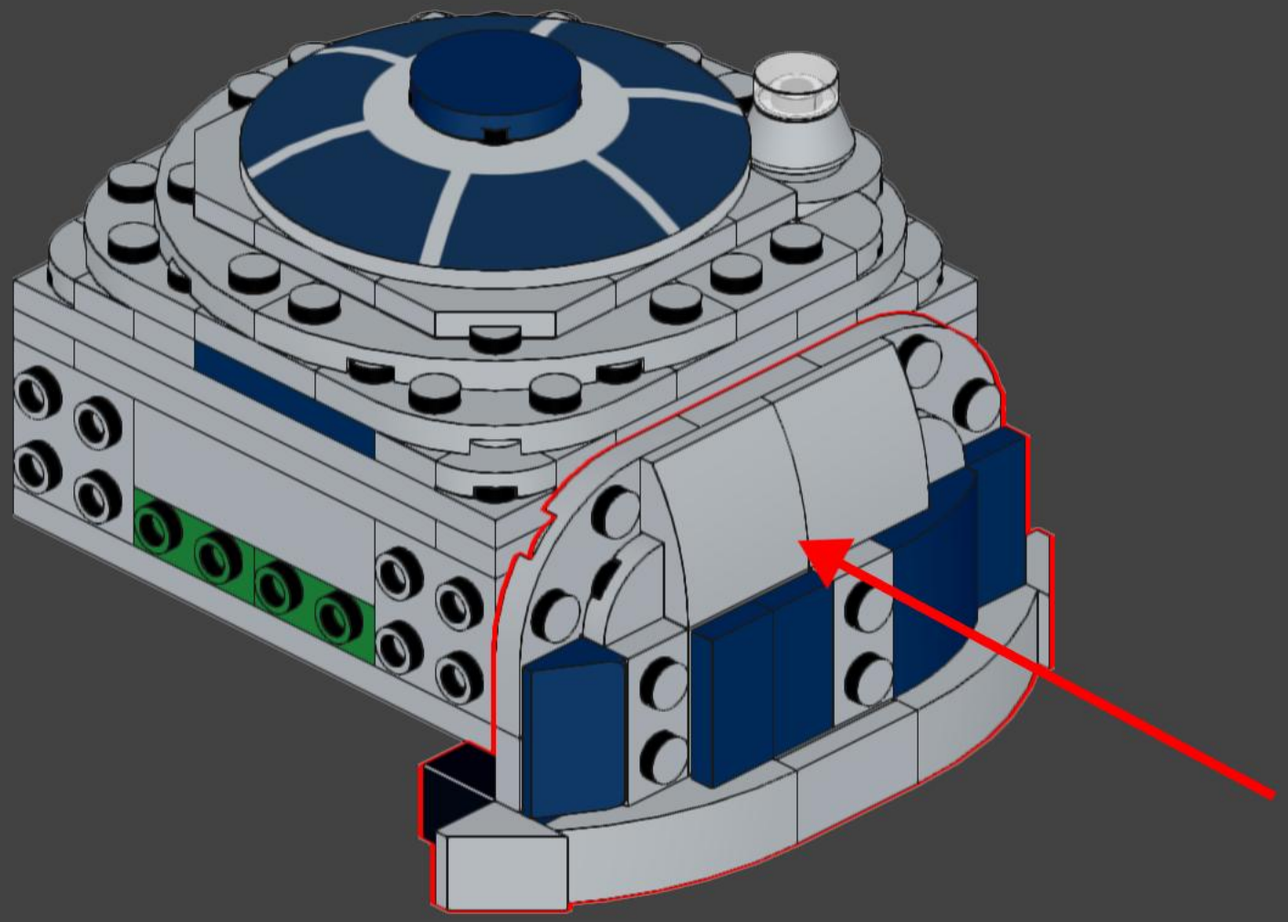

23

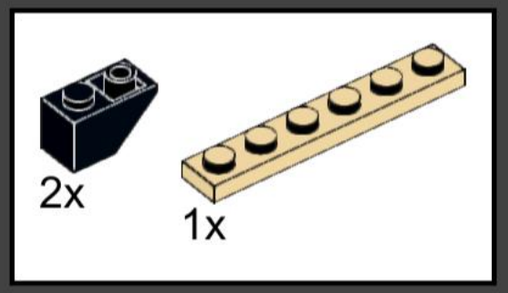

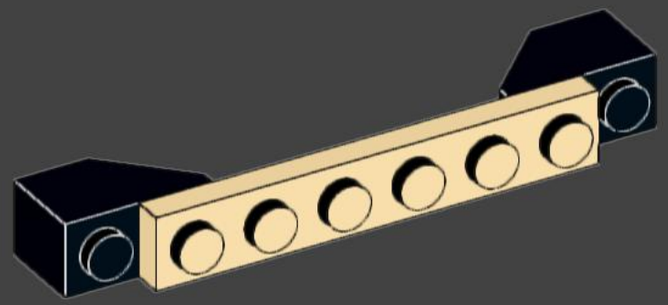

24

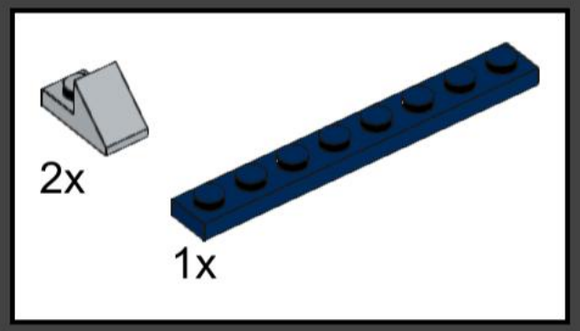

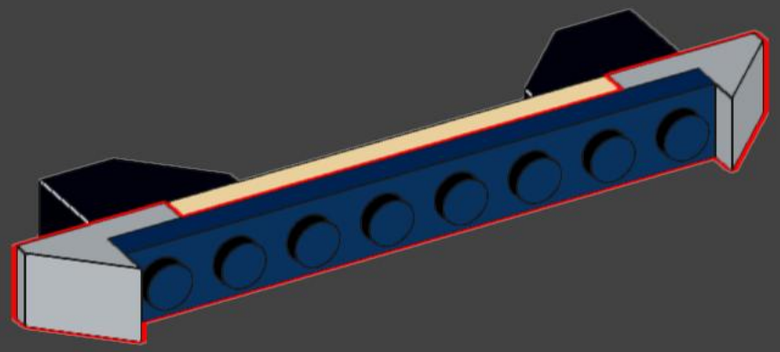

25

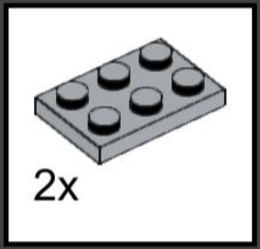

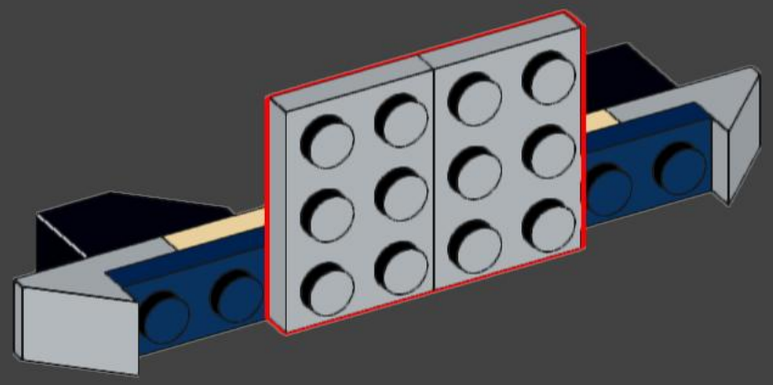

26

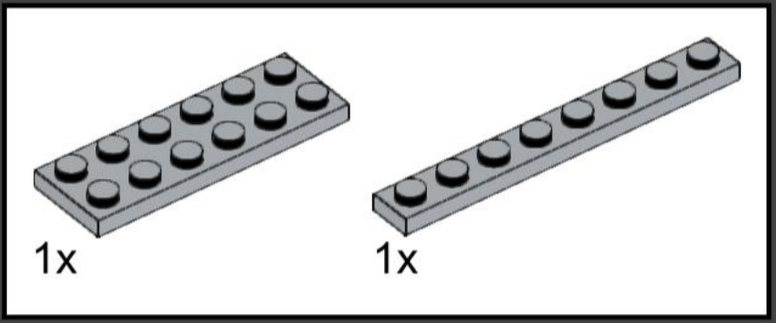

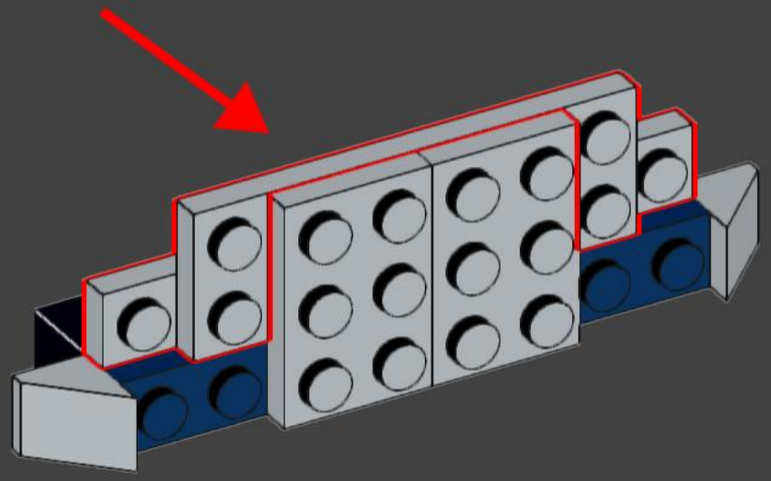

27

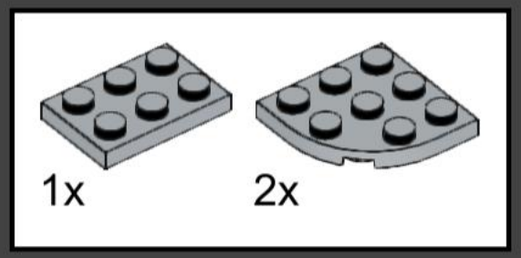

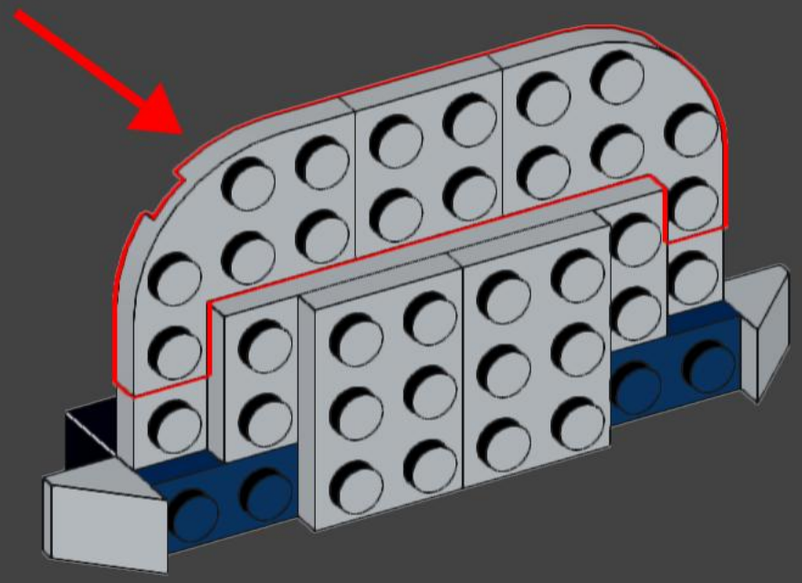

28

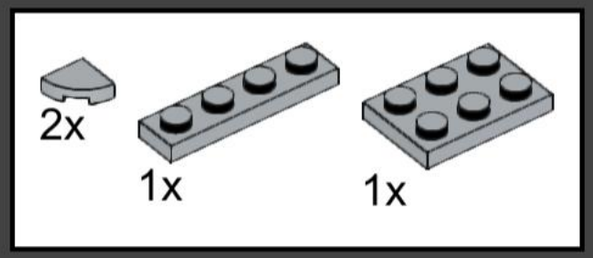

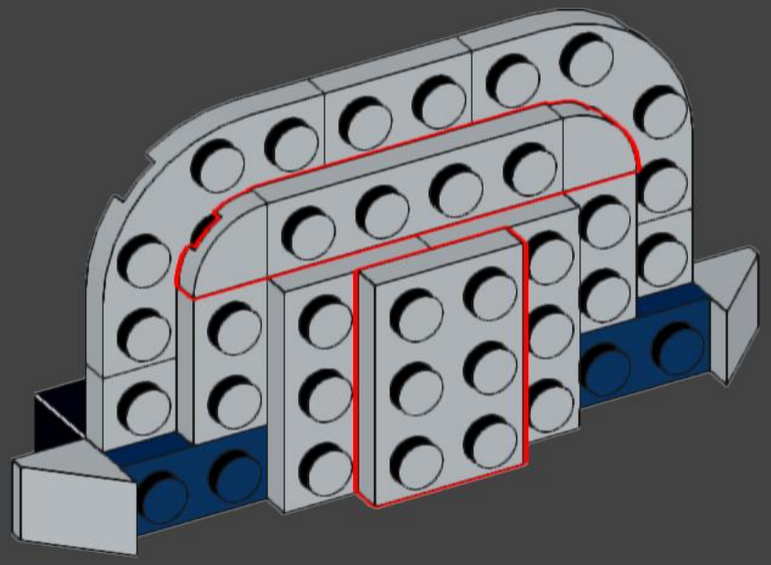

29

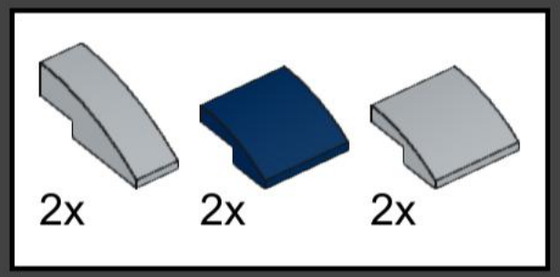

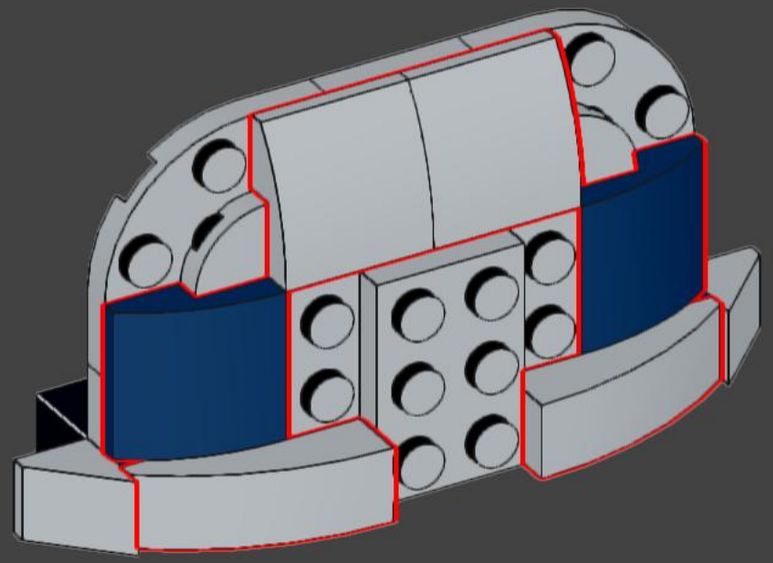

30

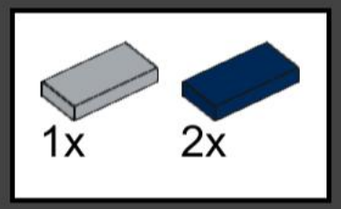

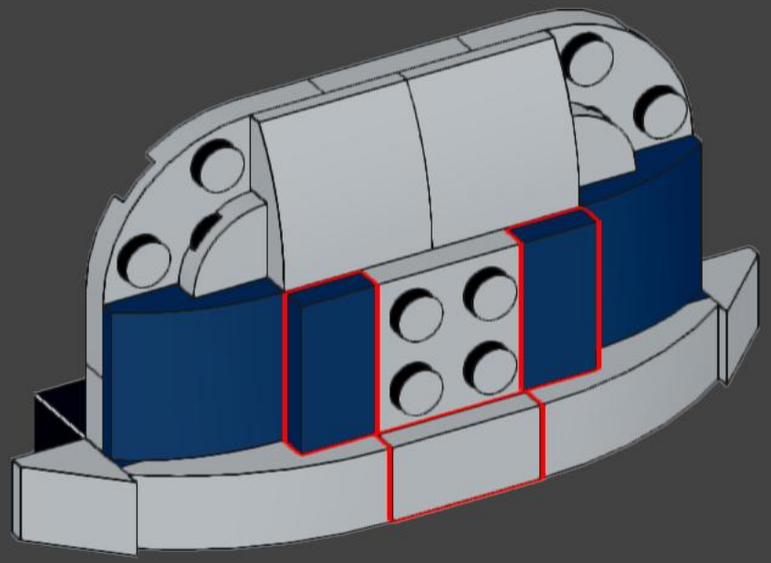

31

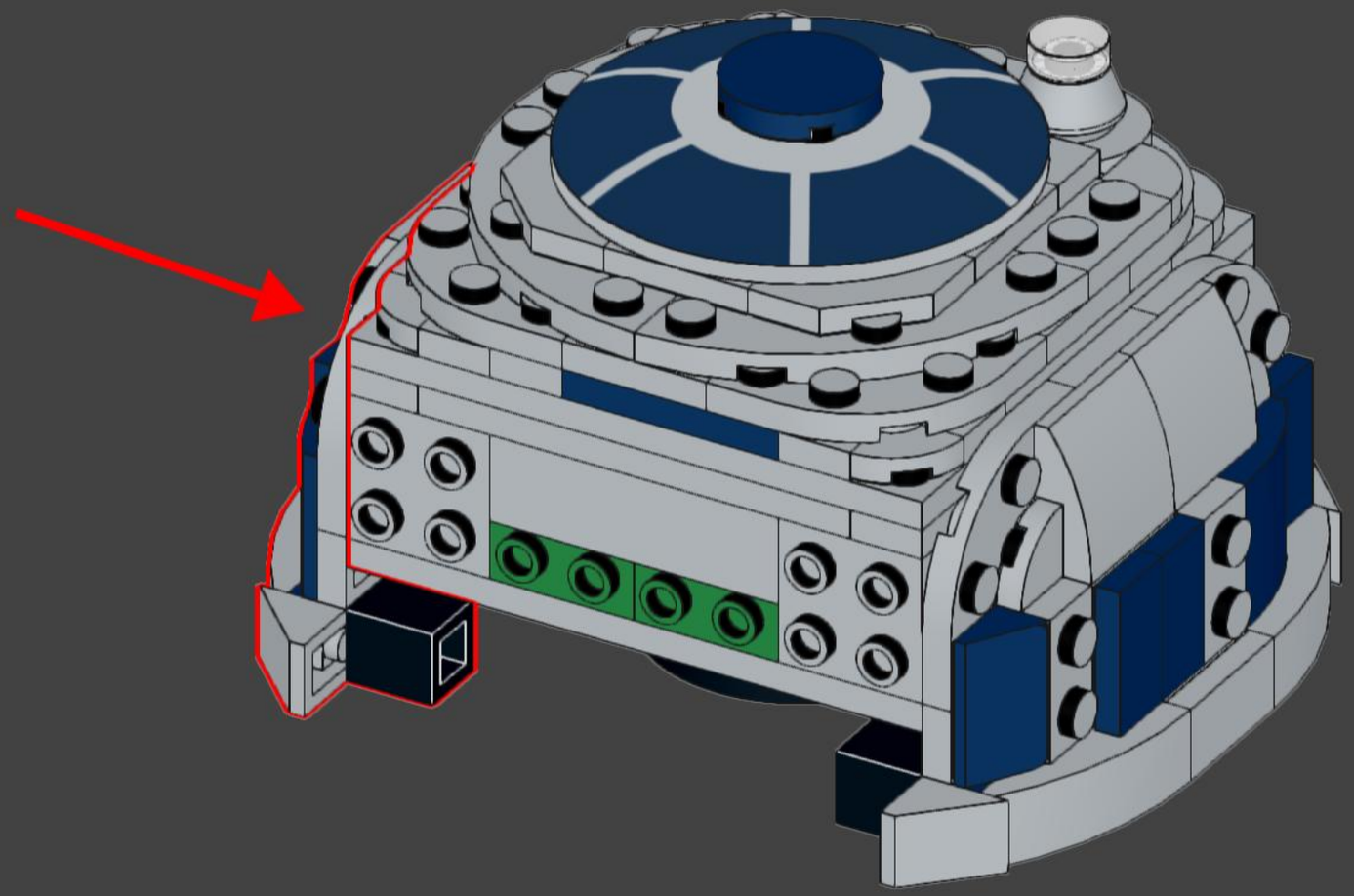

32

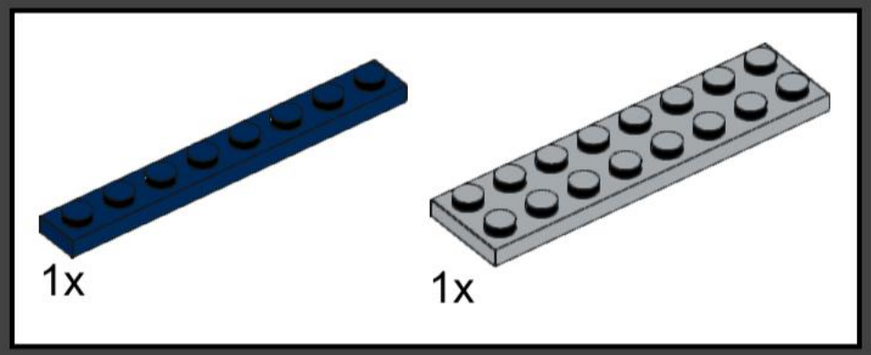

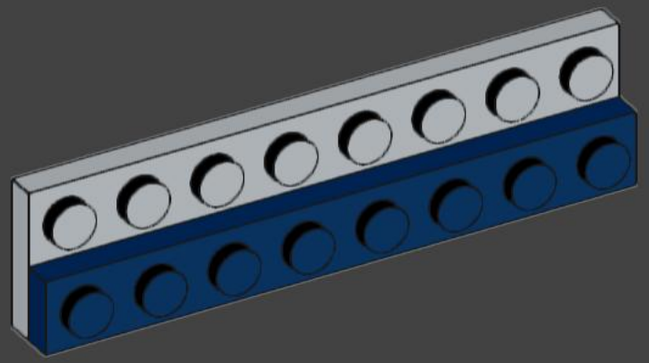

33

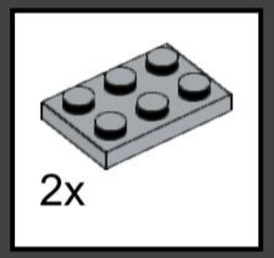

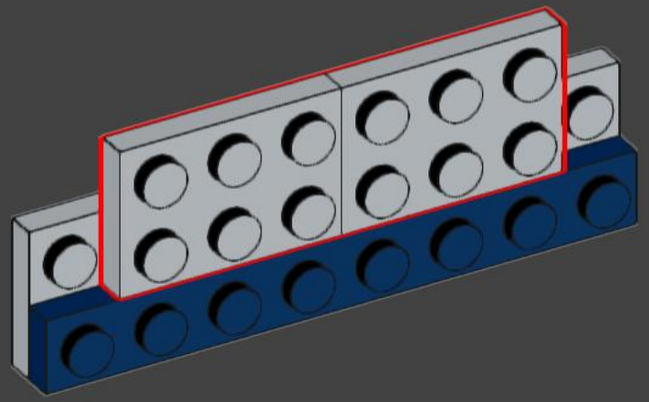

34

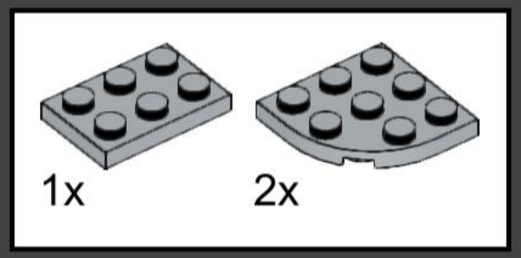

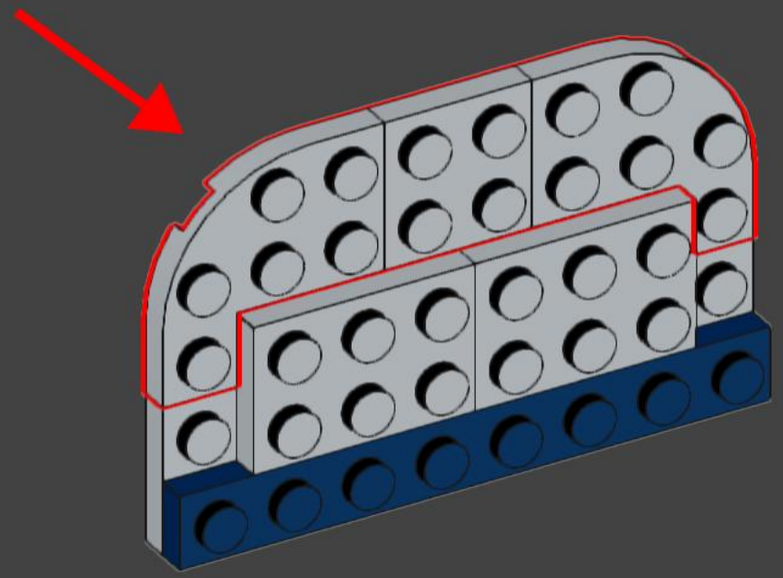

35

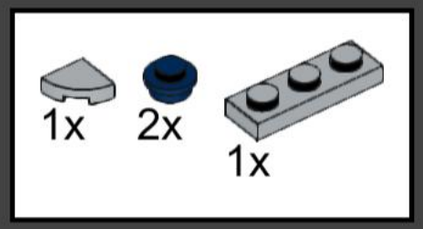

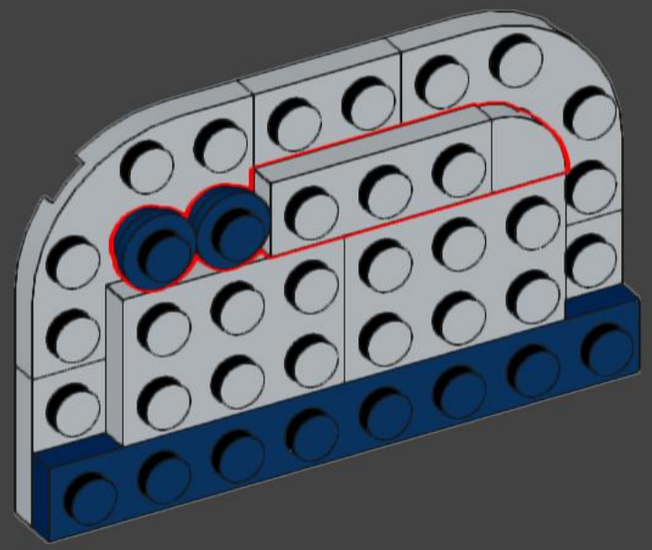

36

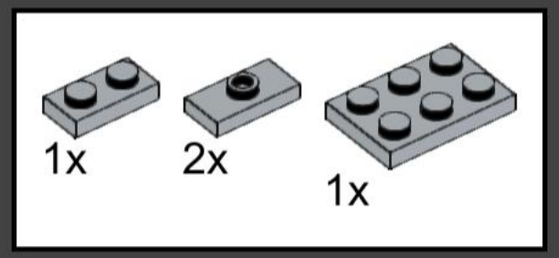

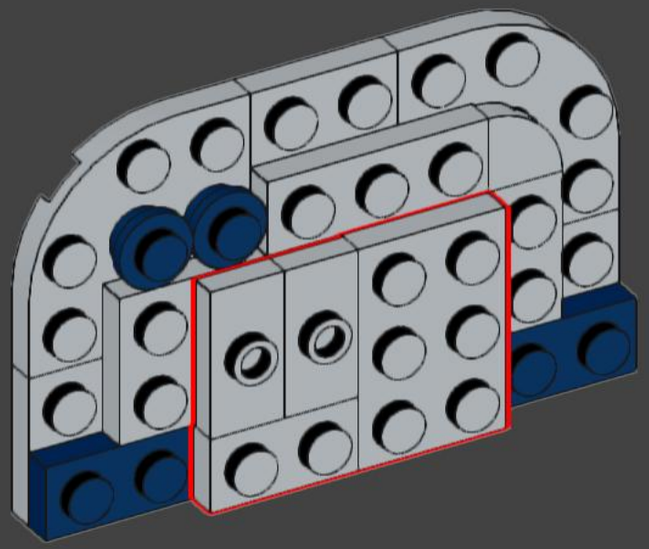

37

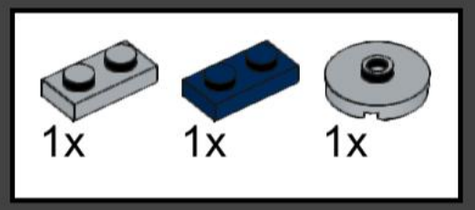

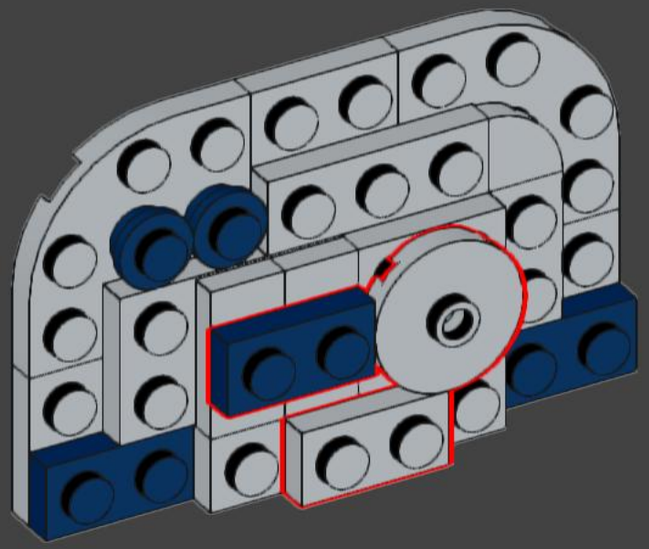

38

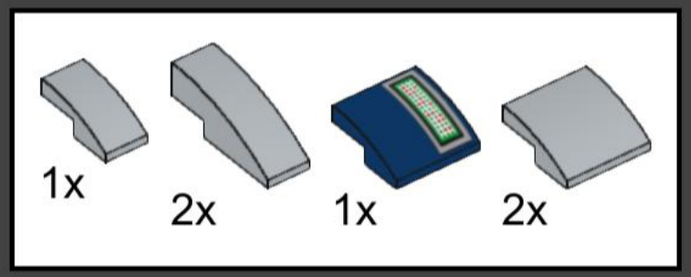

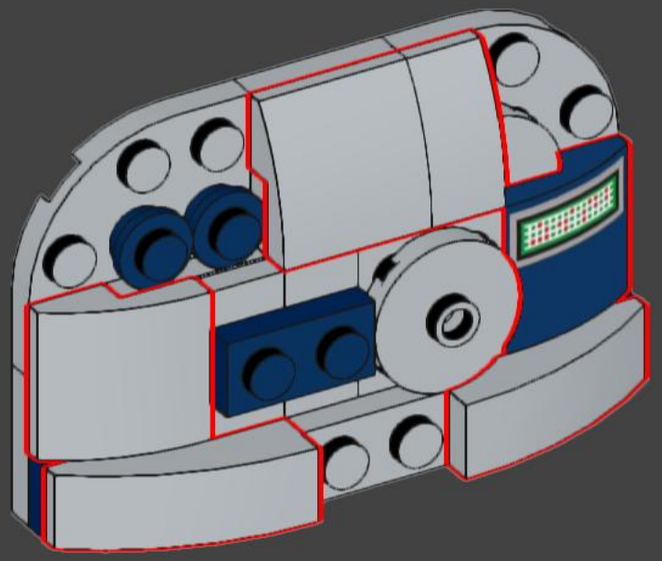

39

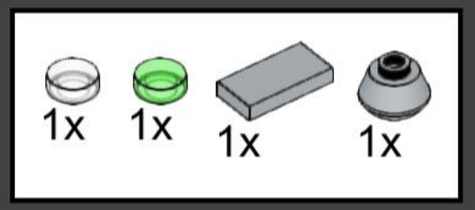

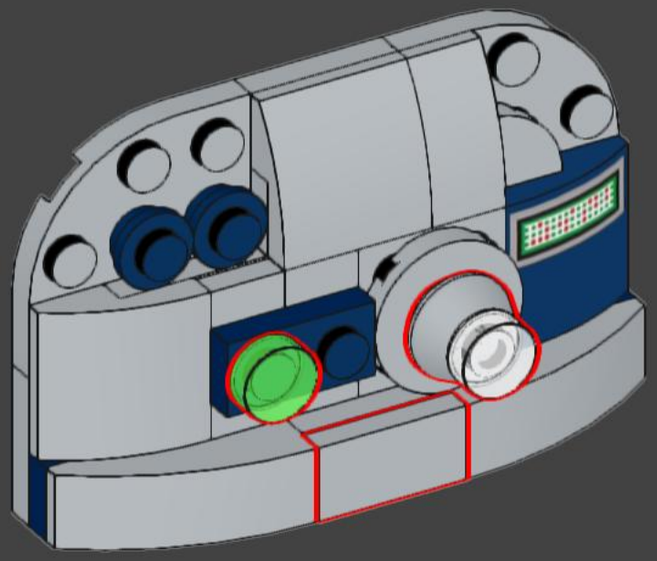

40

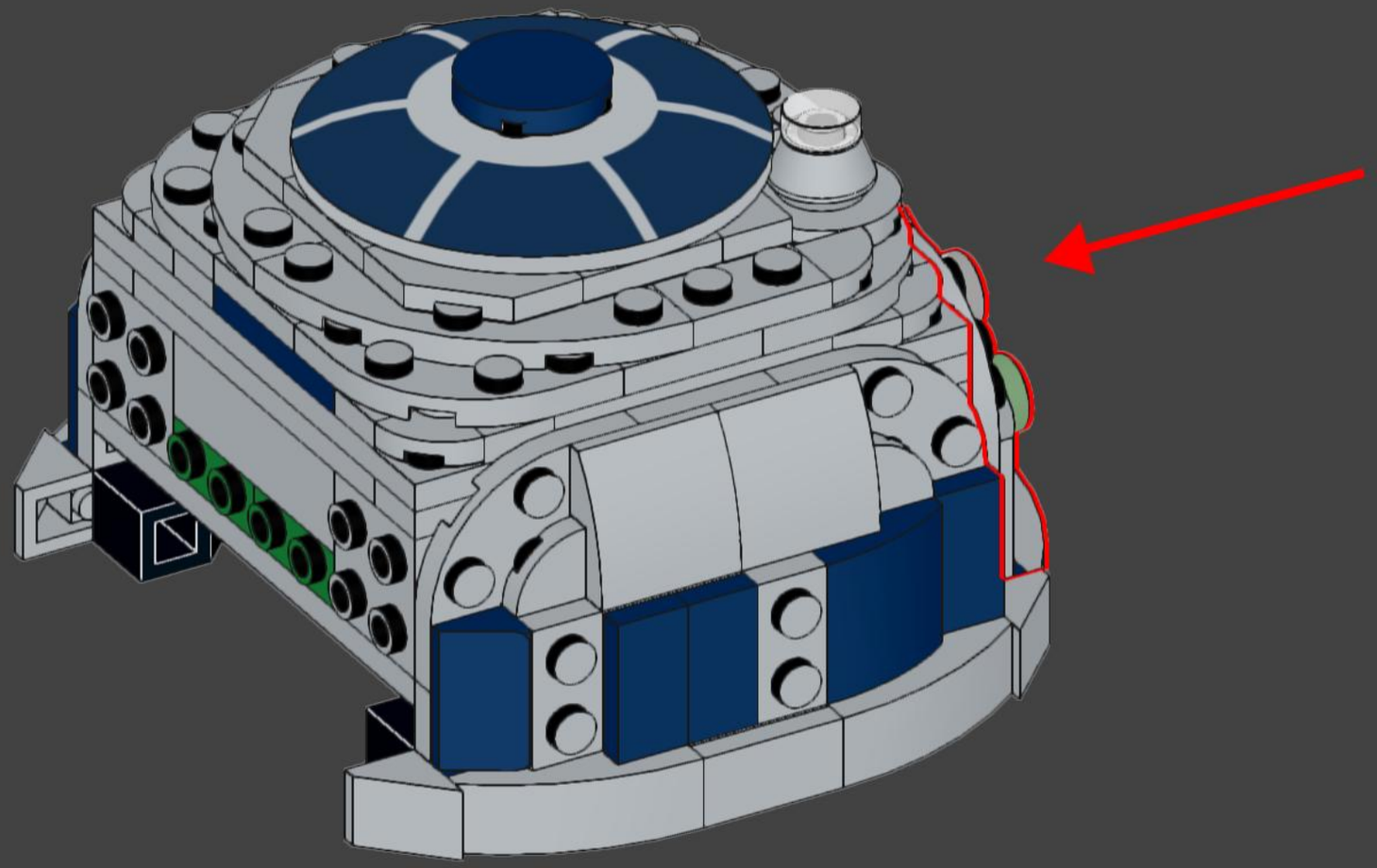

41

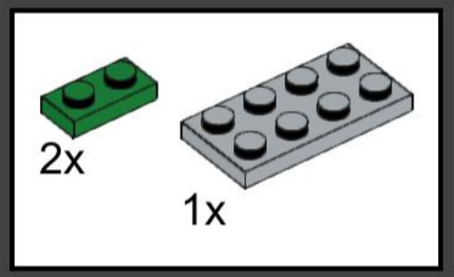

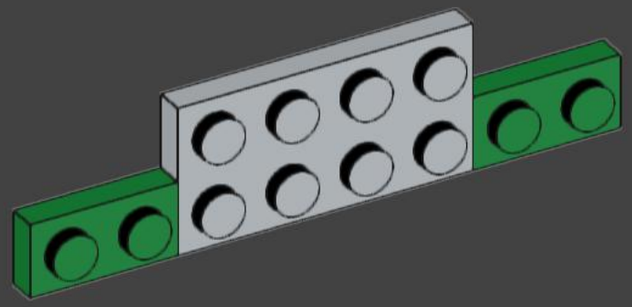

42

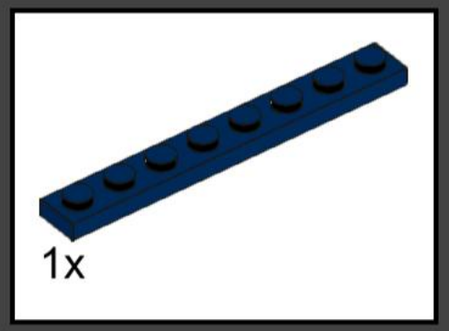

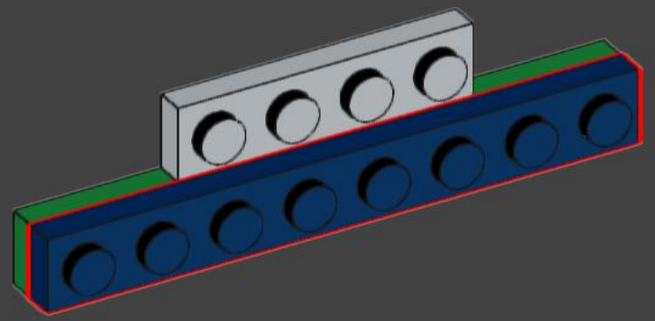

43

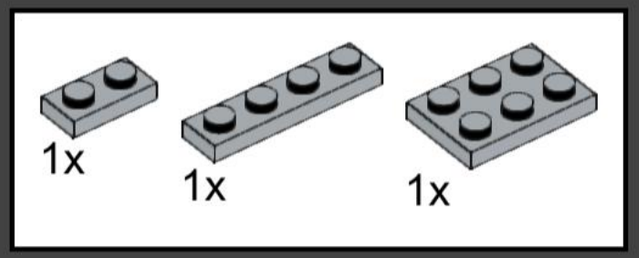

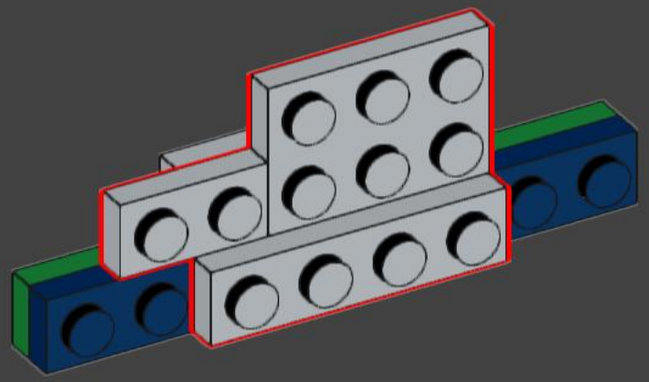

44

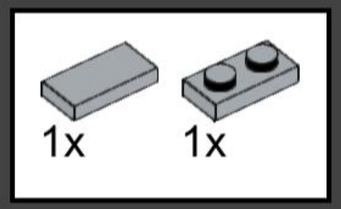

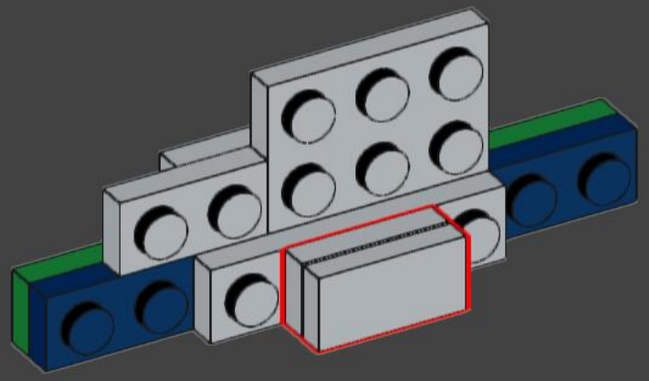

45

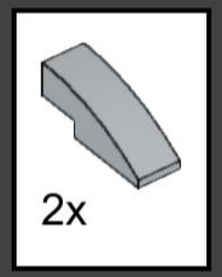

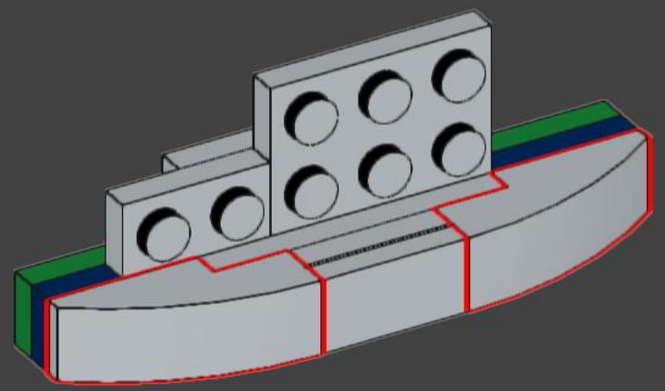

46

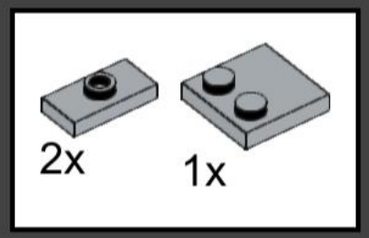

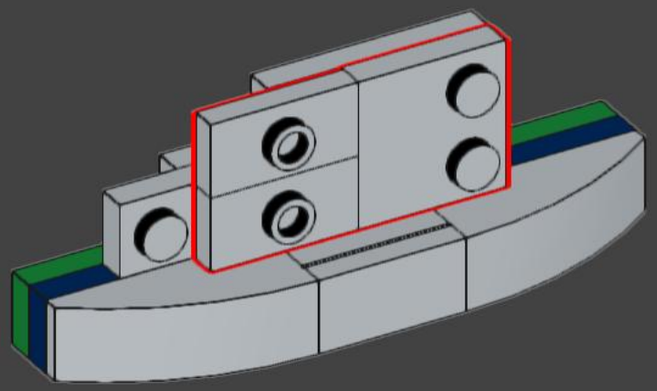

47

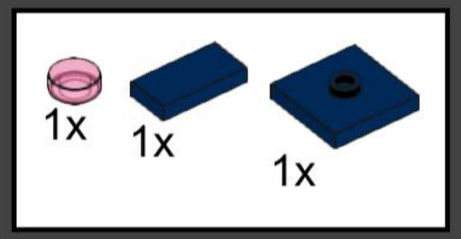

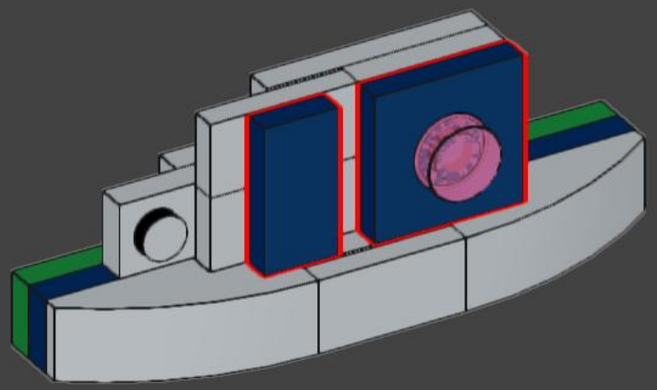

48

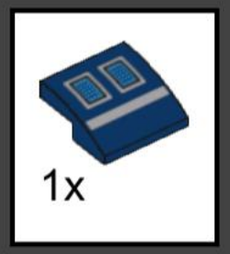

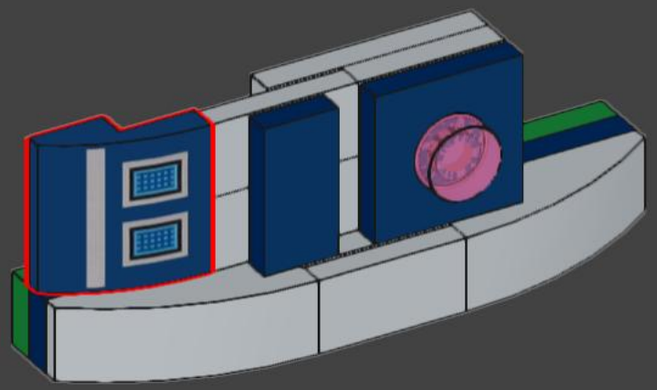

49

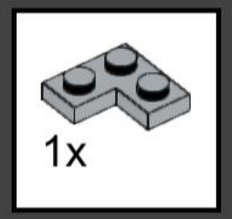

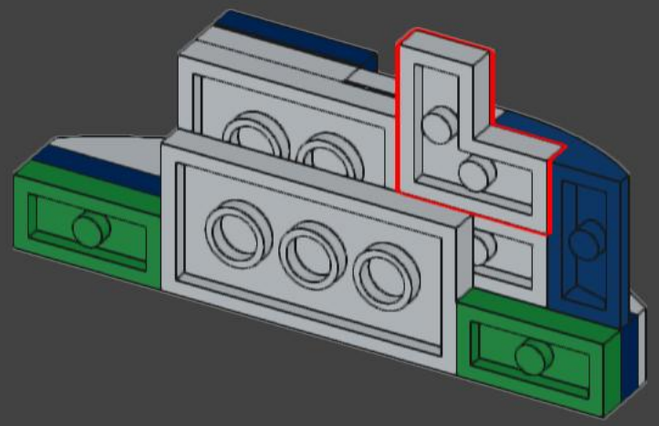

50

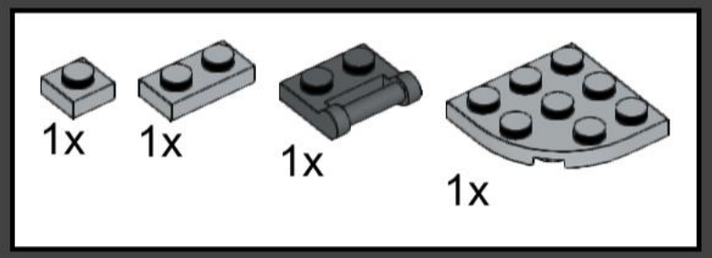

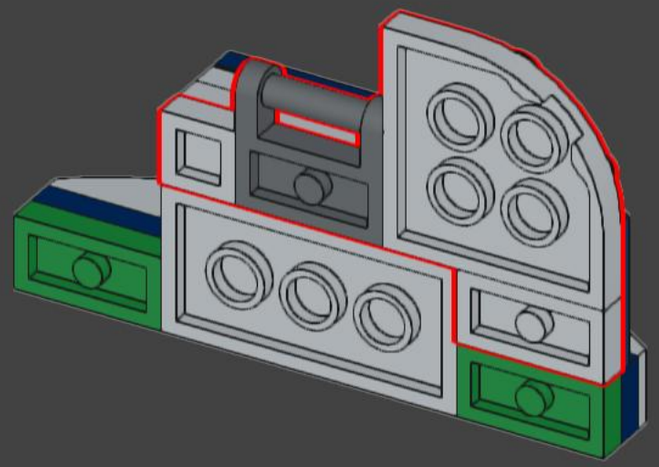

51

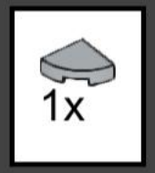

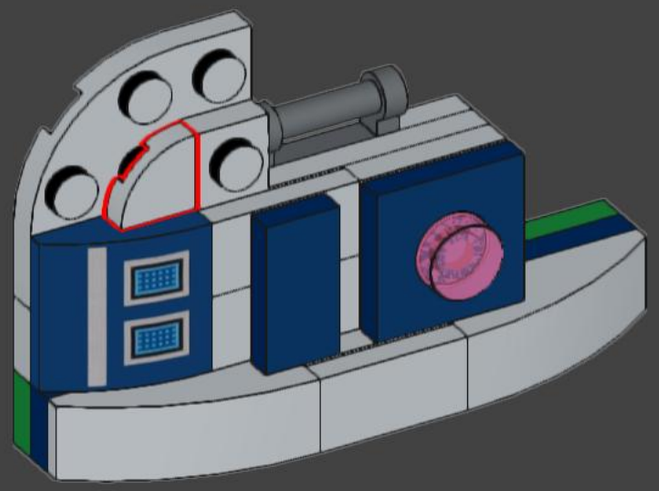

52

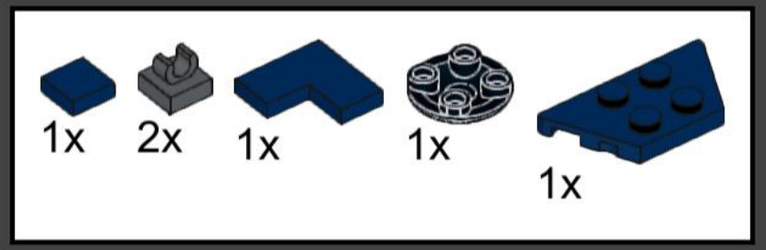

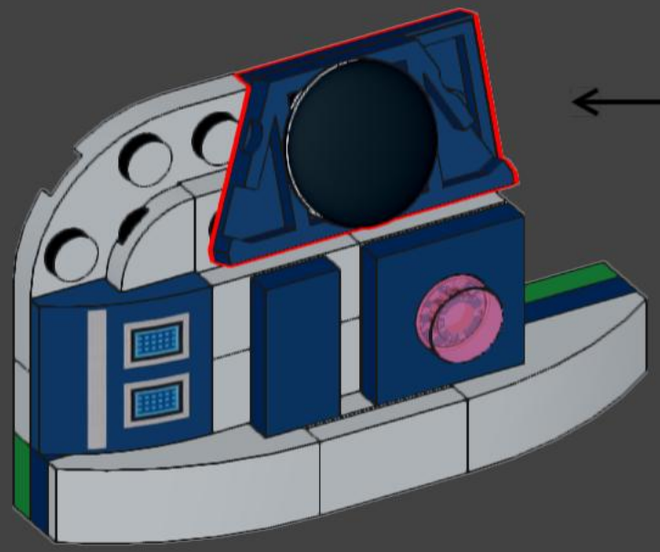

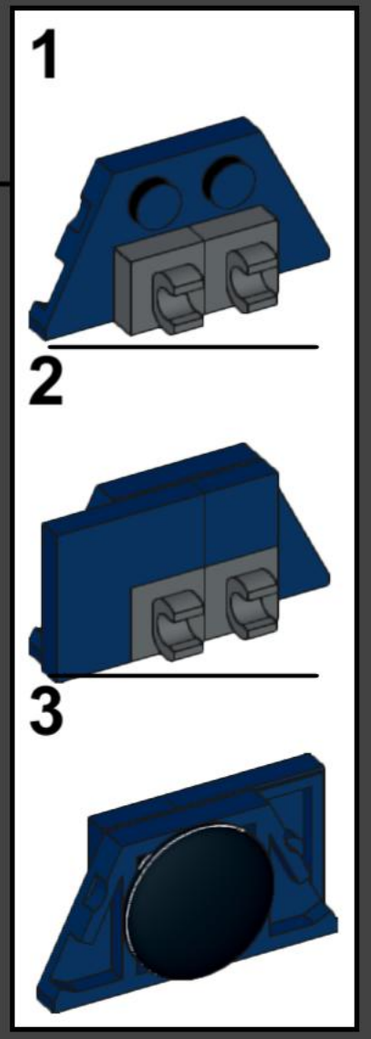

53

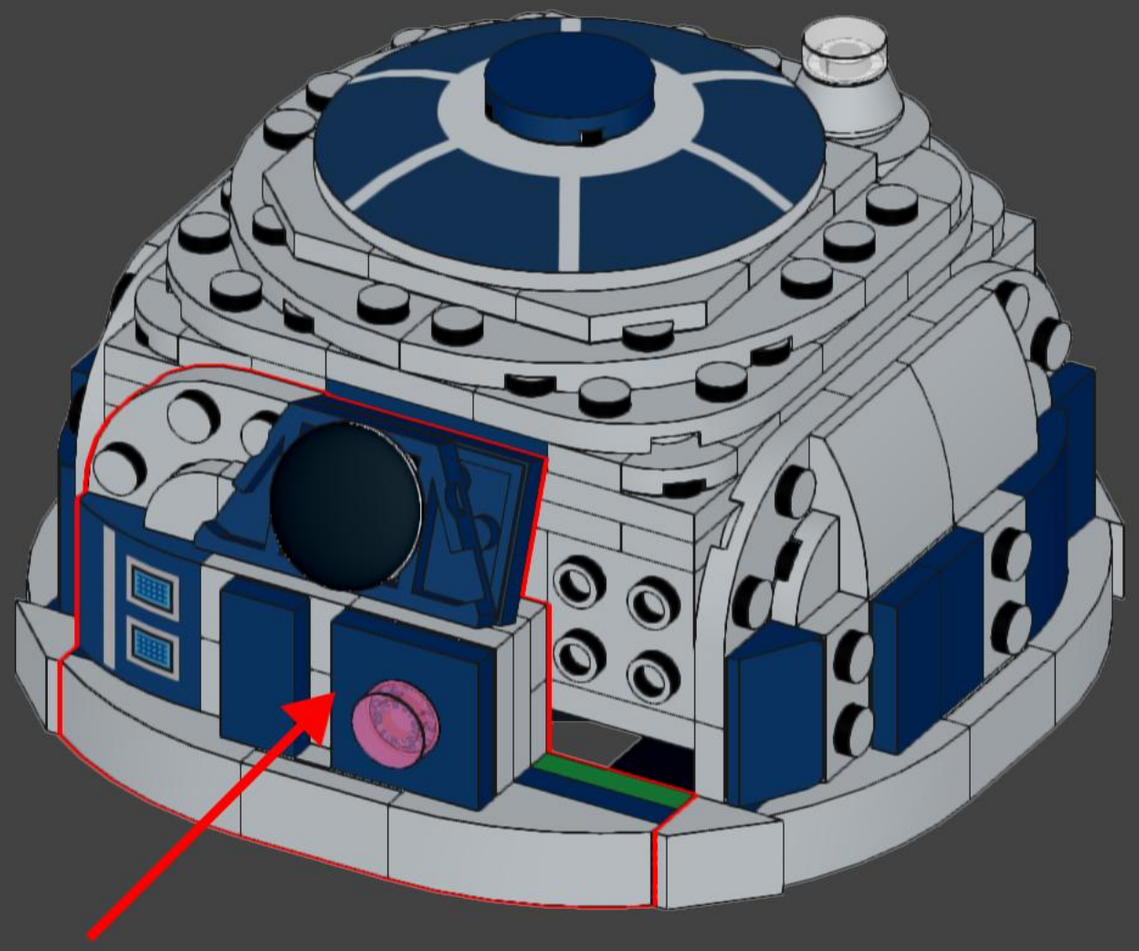

54

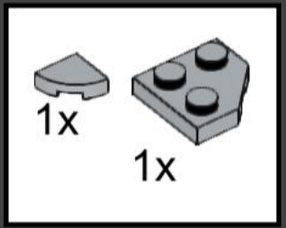

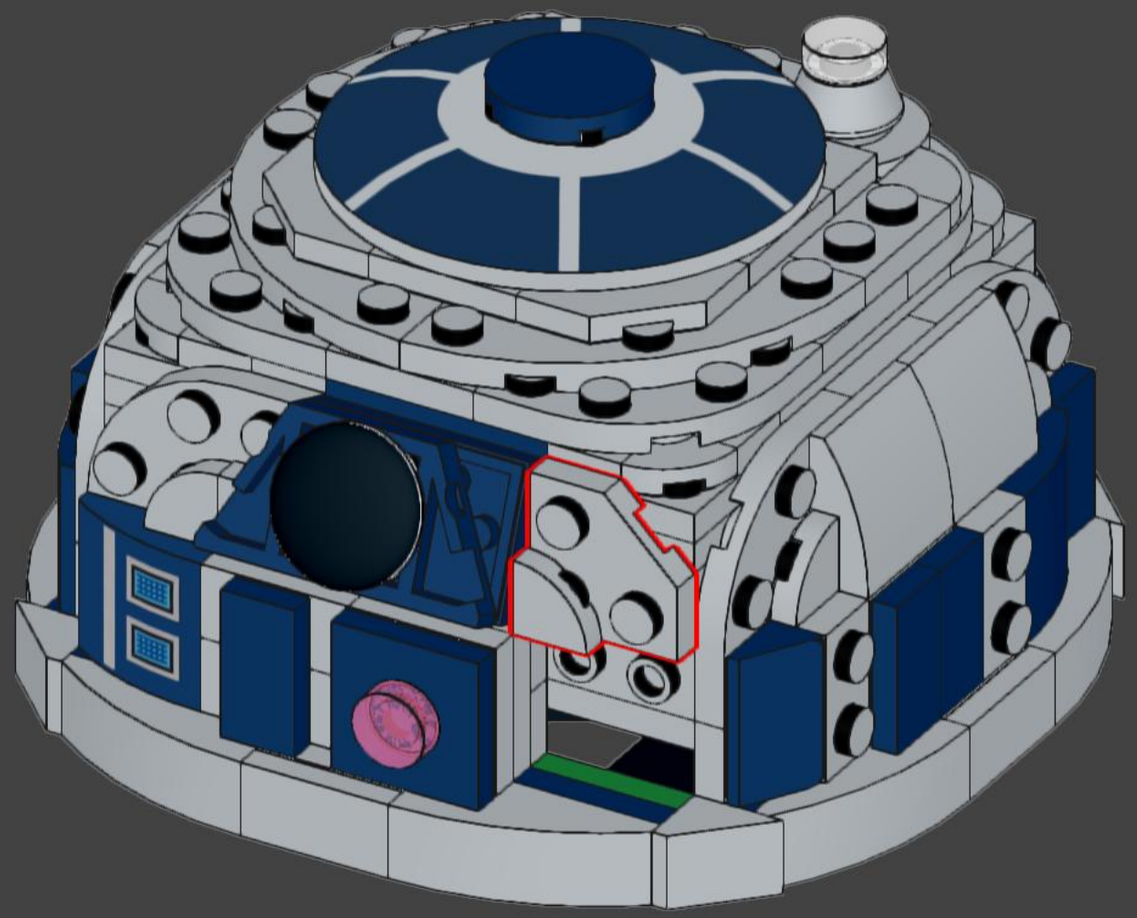

55

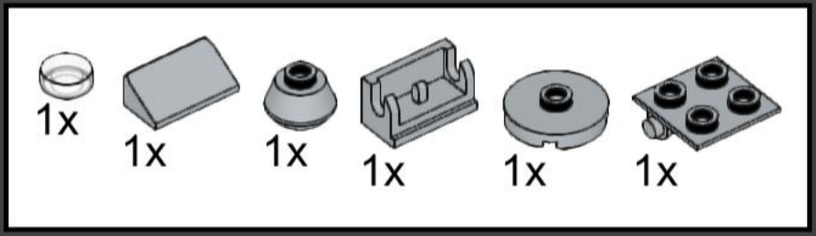

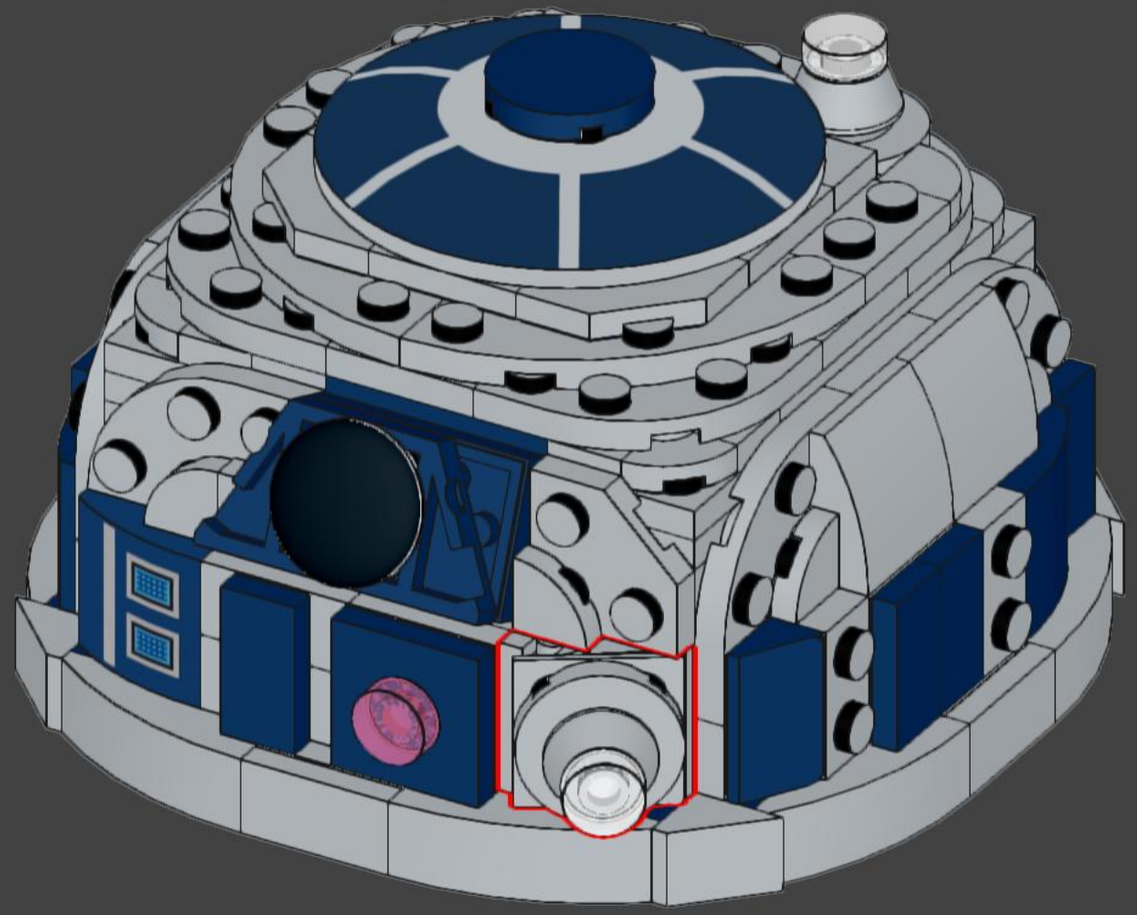

56

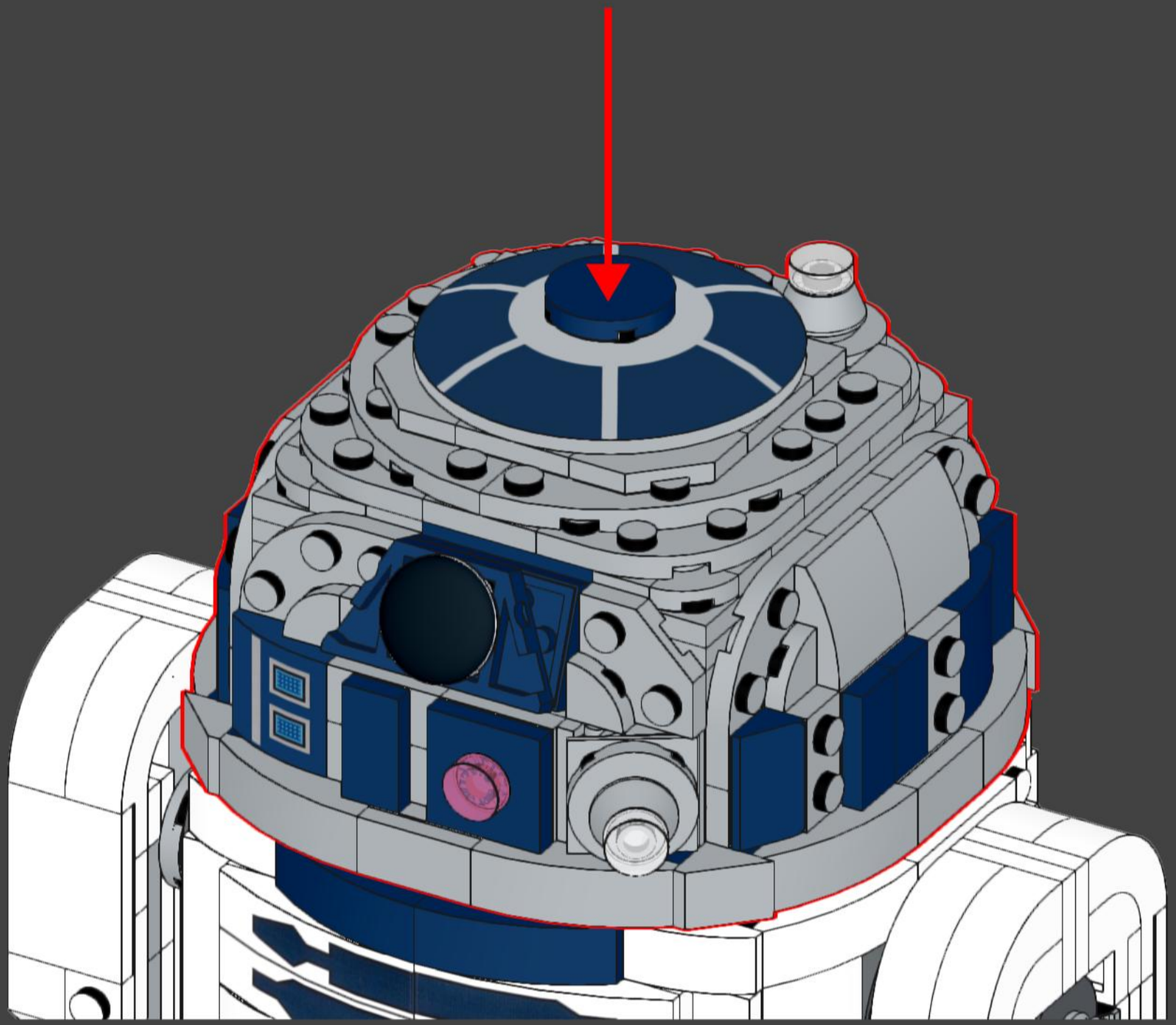

57

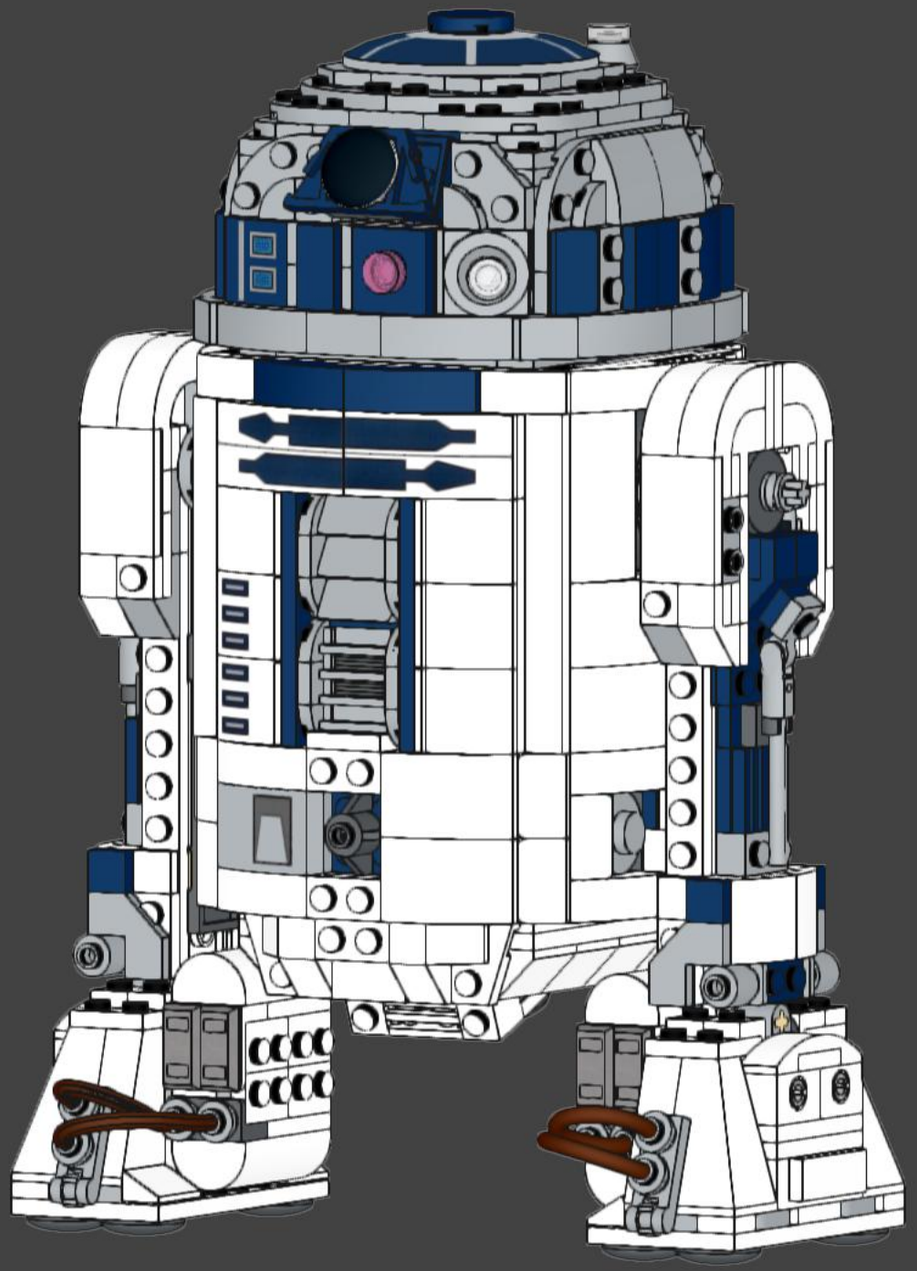

v1.0

BriXpando

brixpando.com