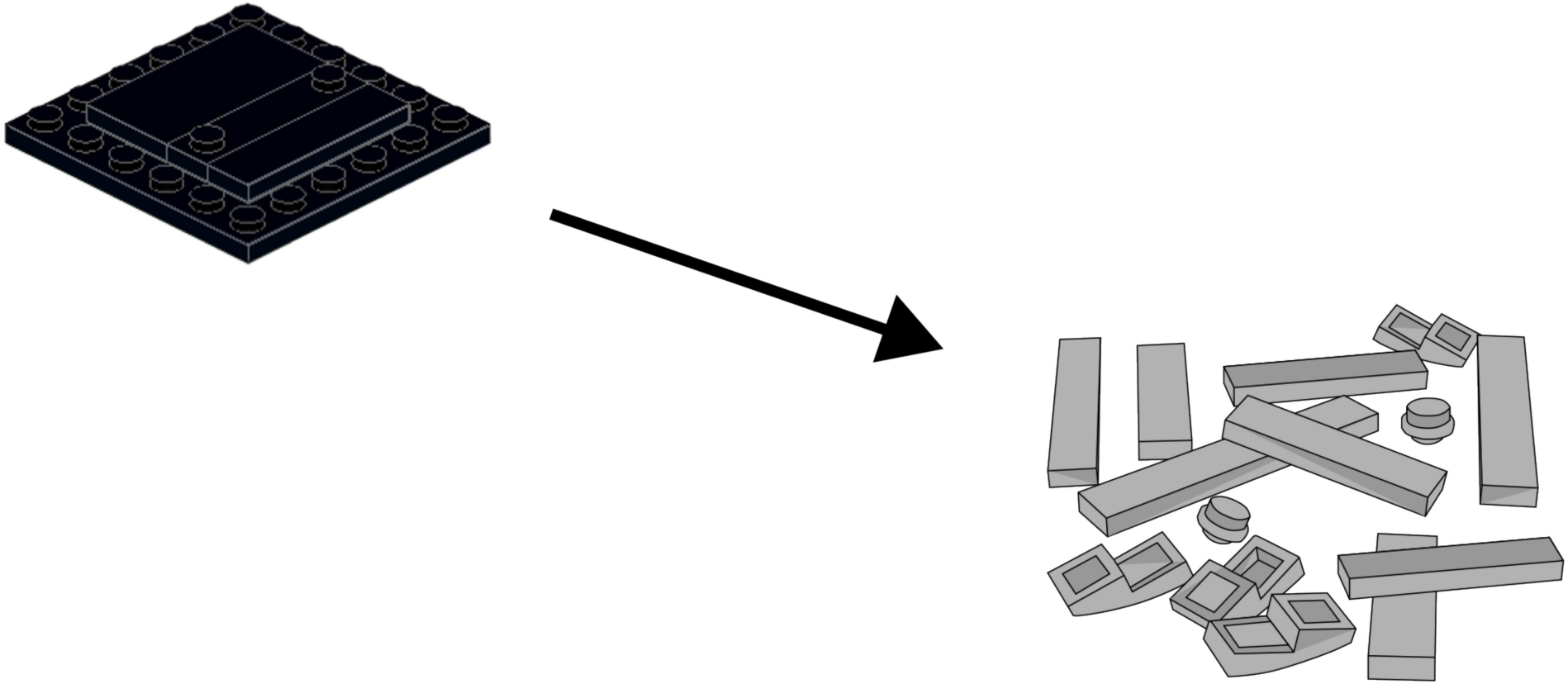

1

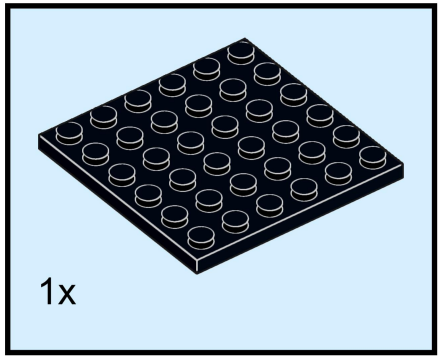

2

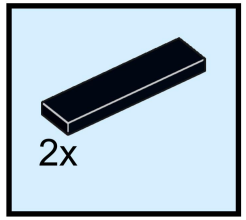

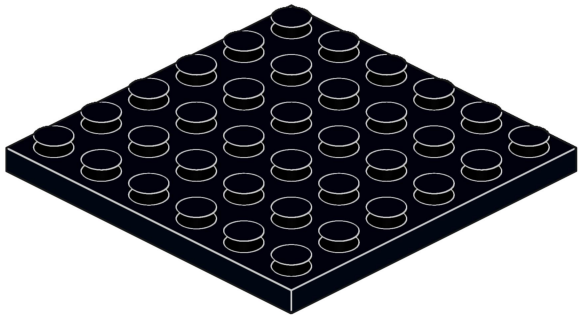

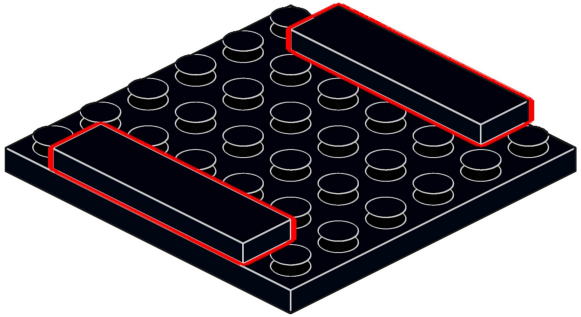

3

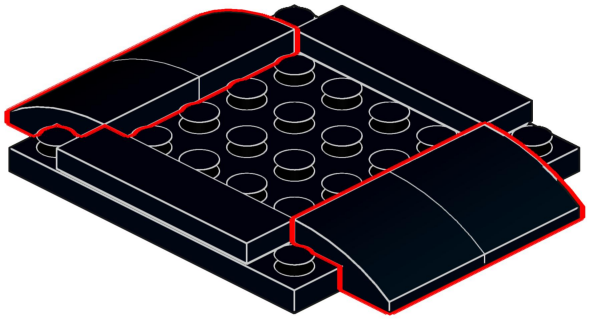

4

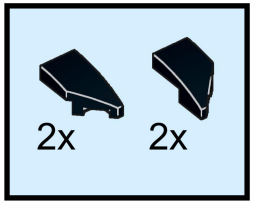

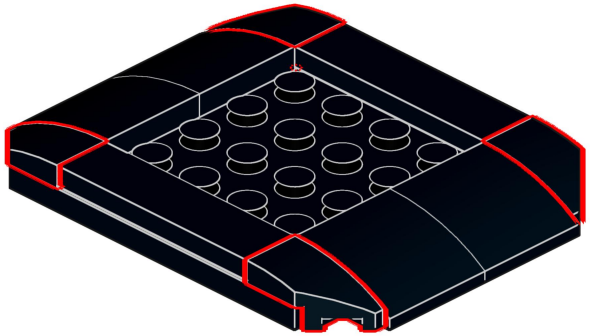

5

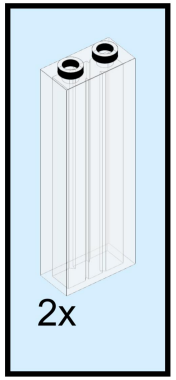

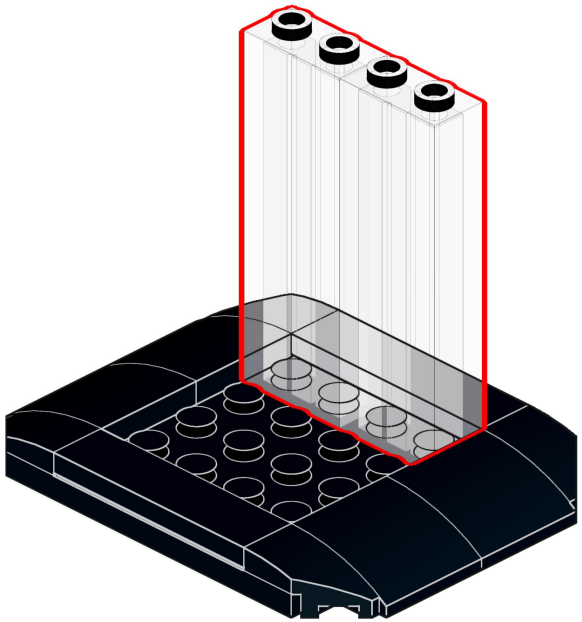

6

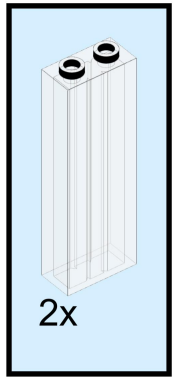

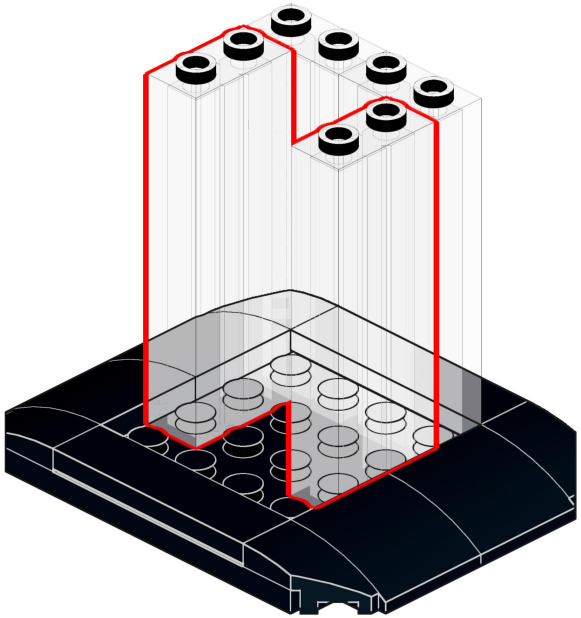

7

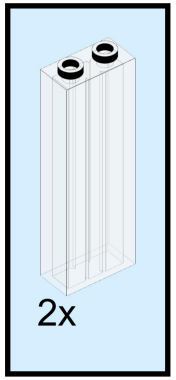

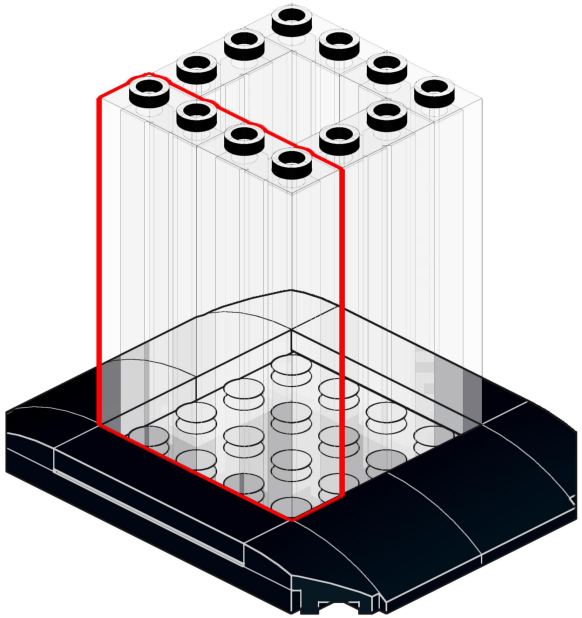

8

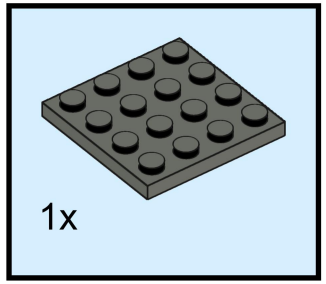

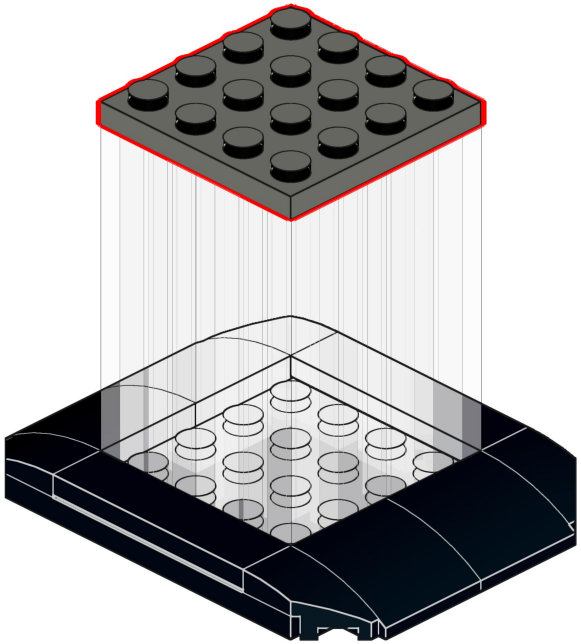

9

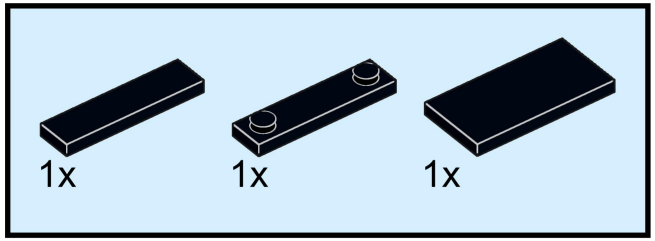

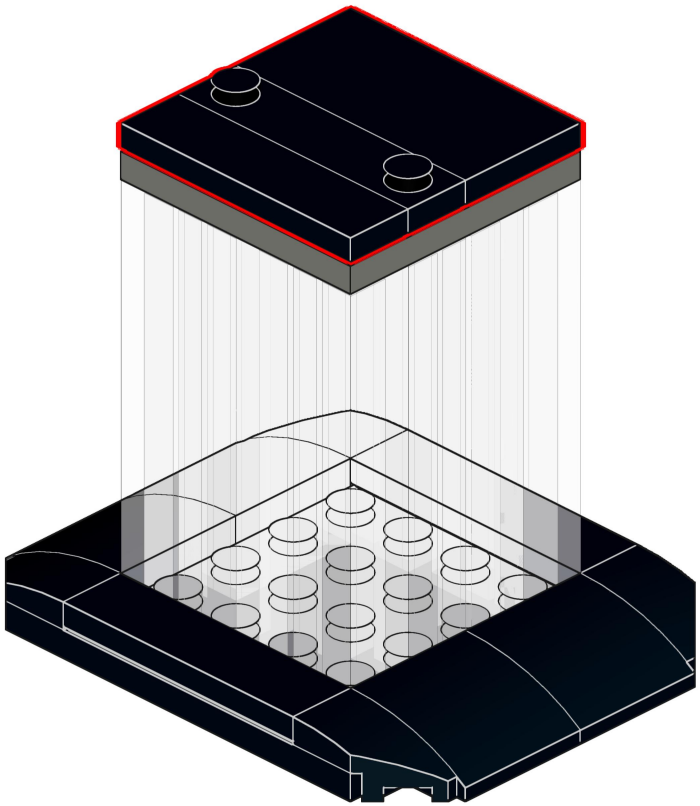

10

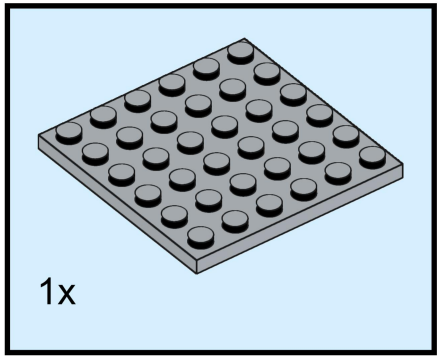

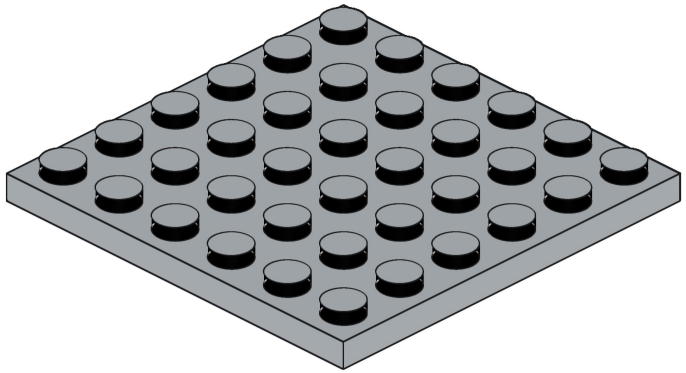

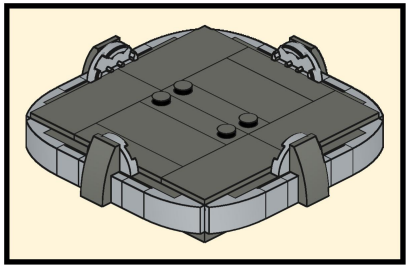

11

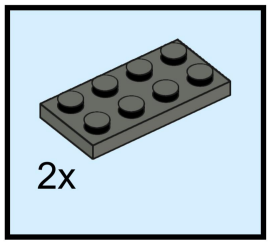

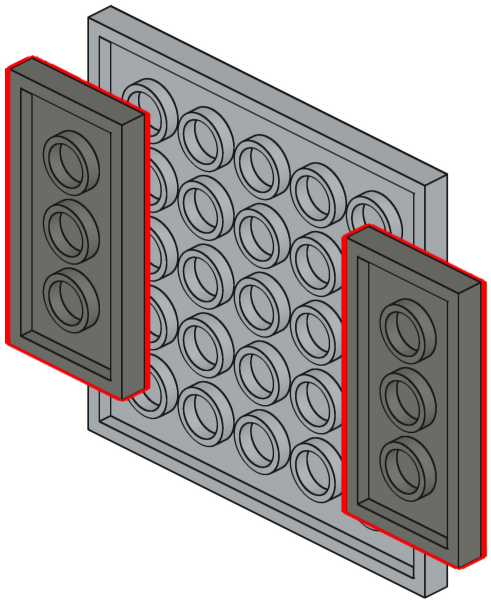

12

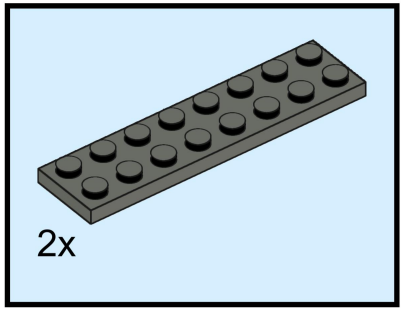

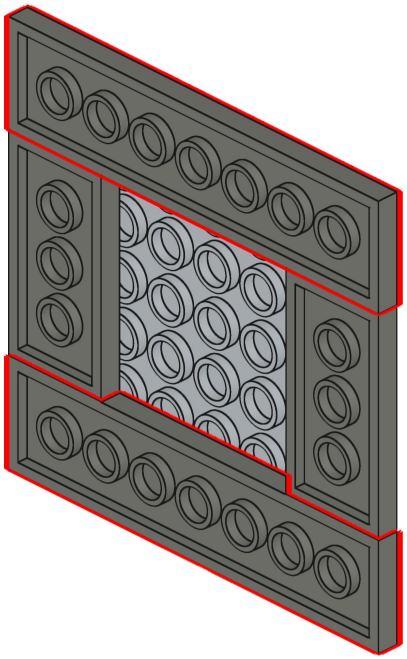

13

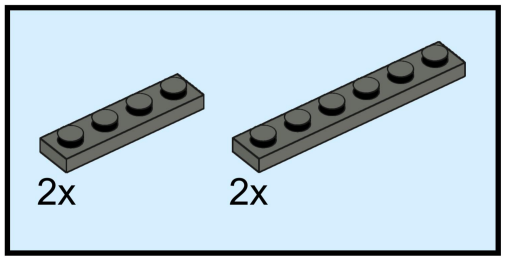

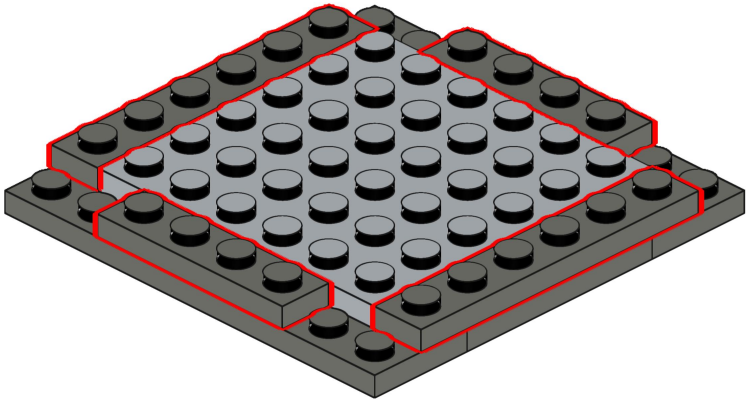

14

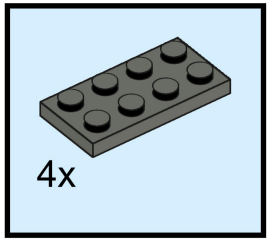

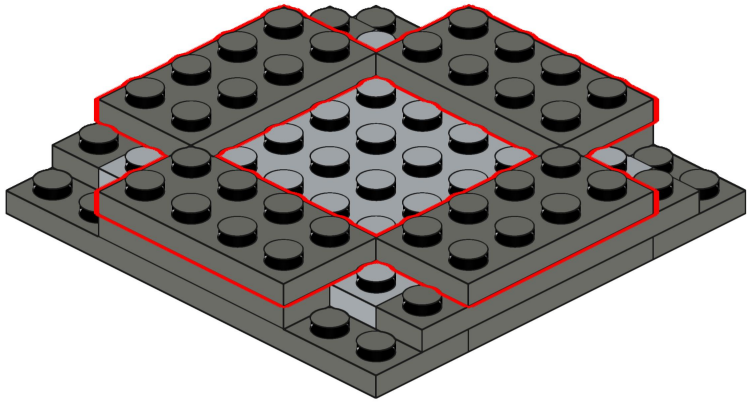

15

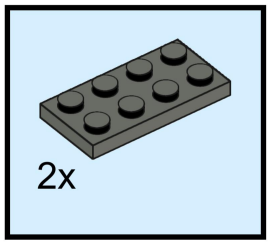

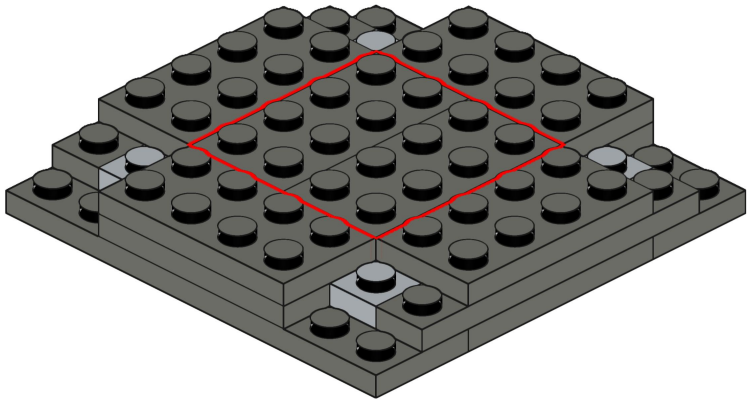

16

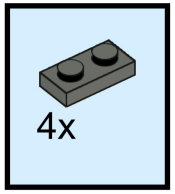

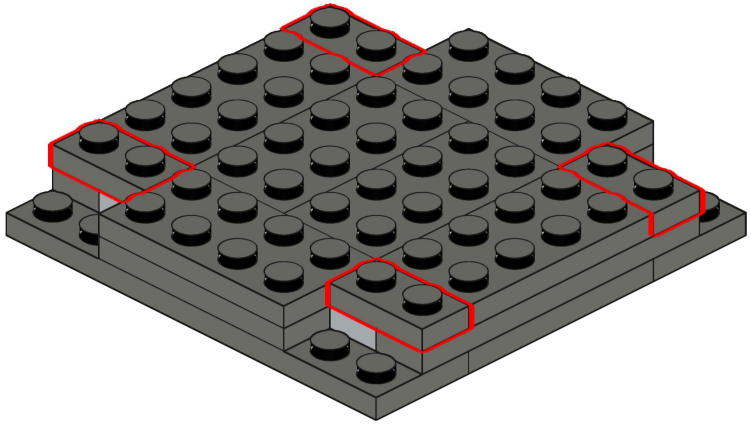

17

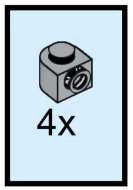

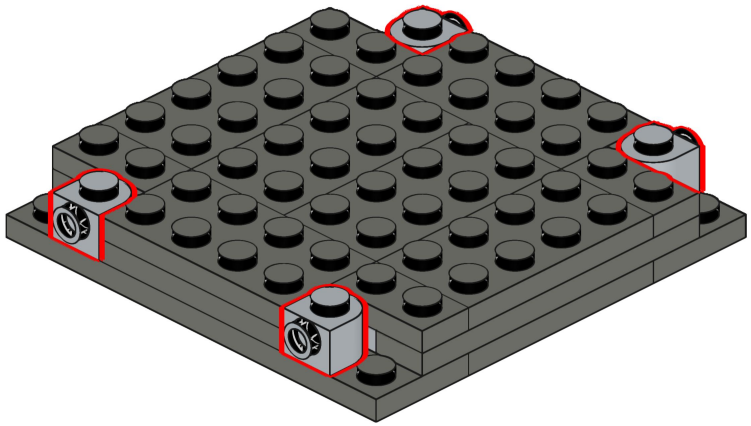

18

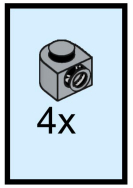

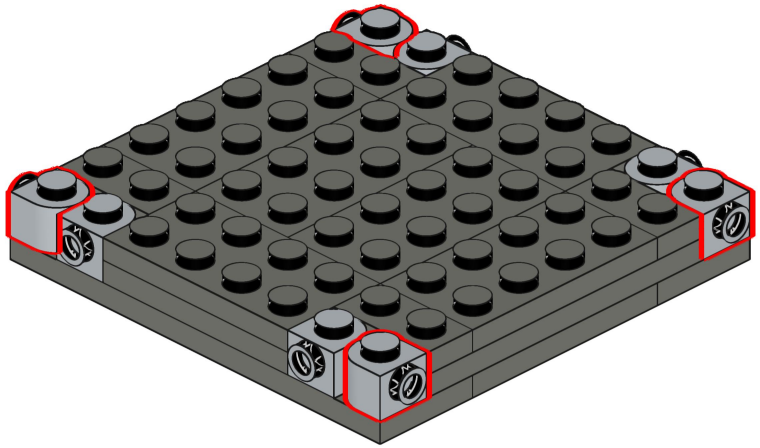

19

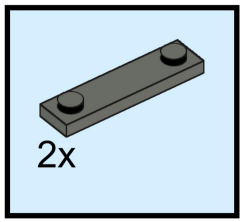

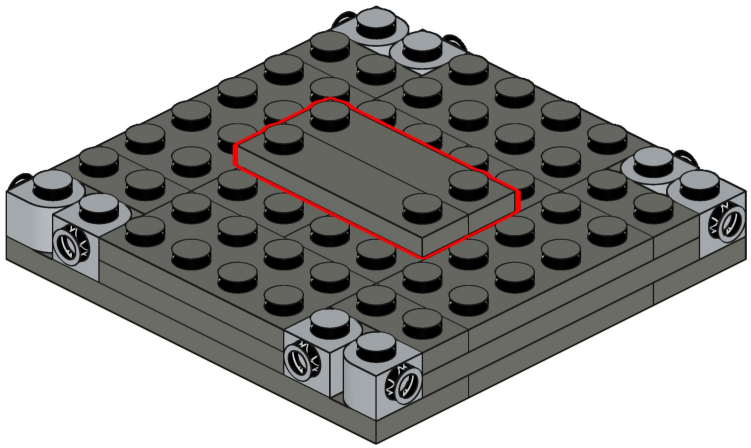

20

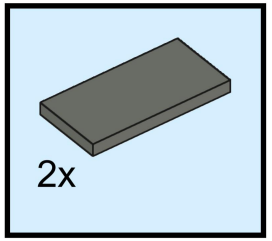

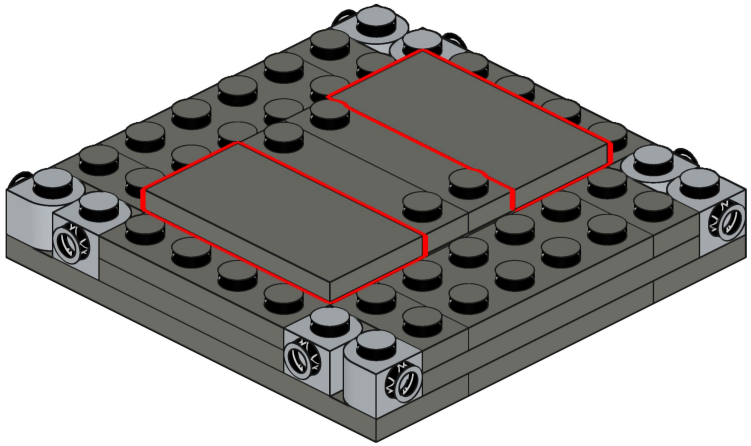

21

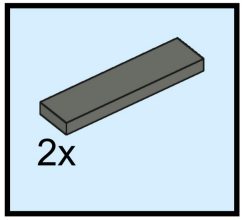

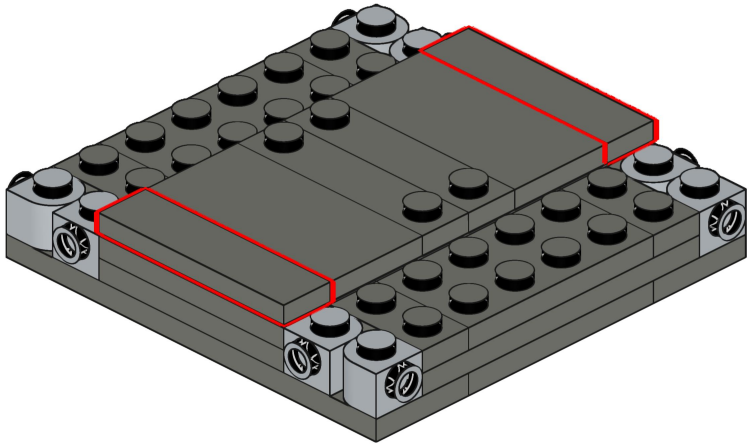

22

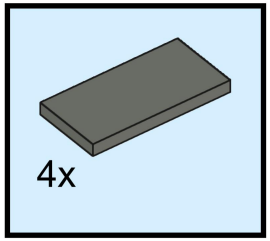

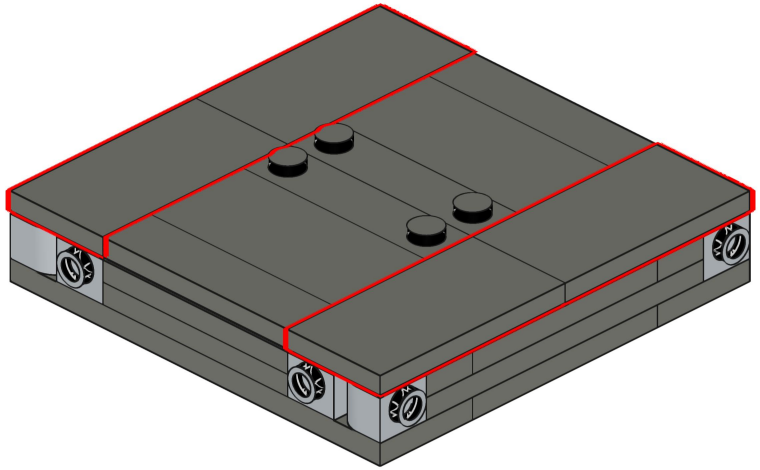

23

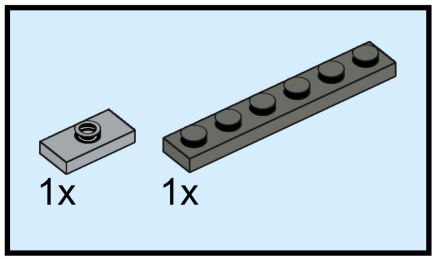

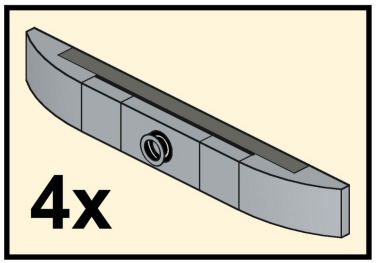

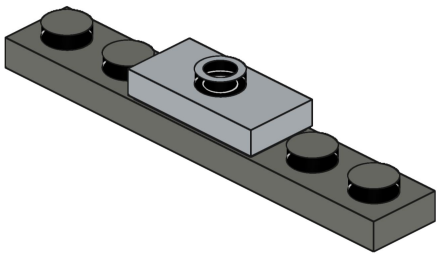

24

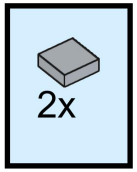

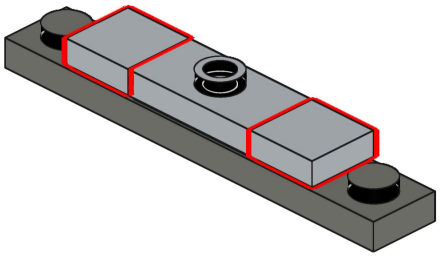

25

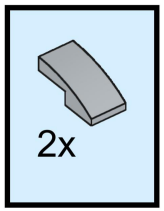

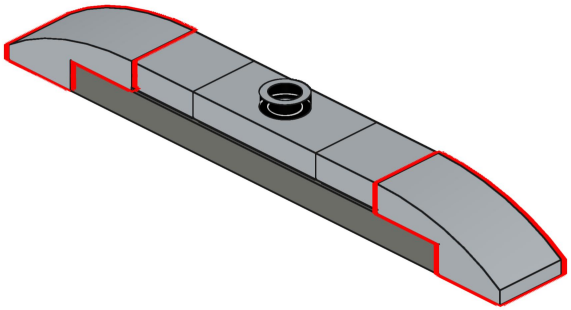

4x

26

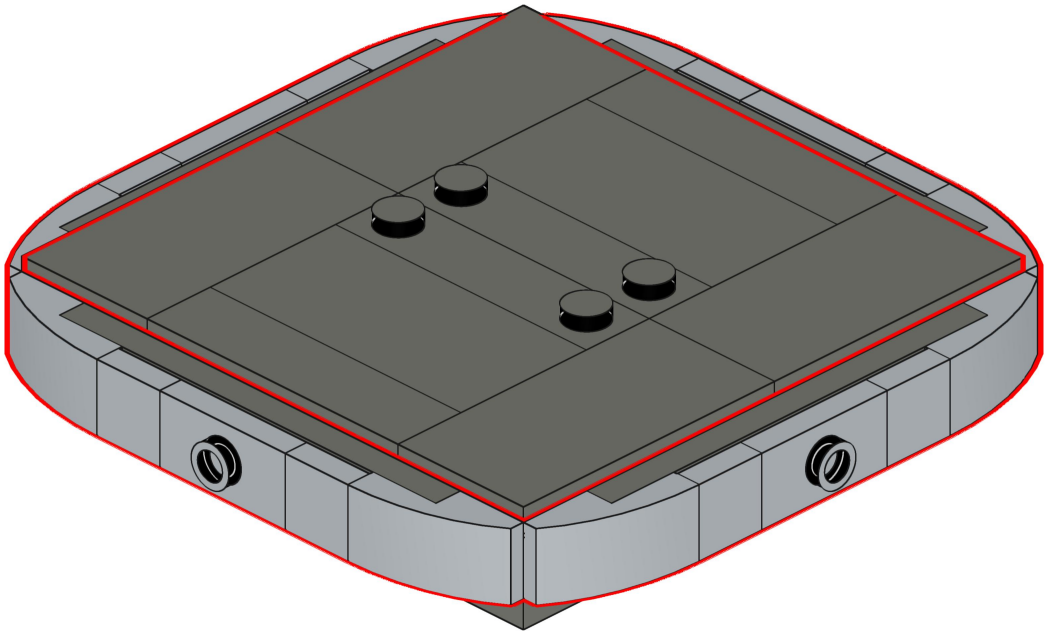

27

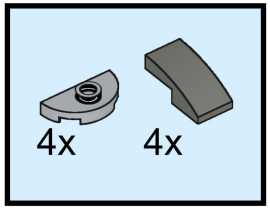

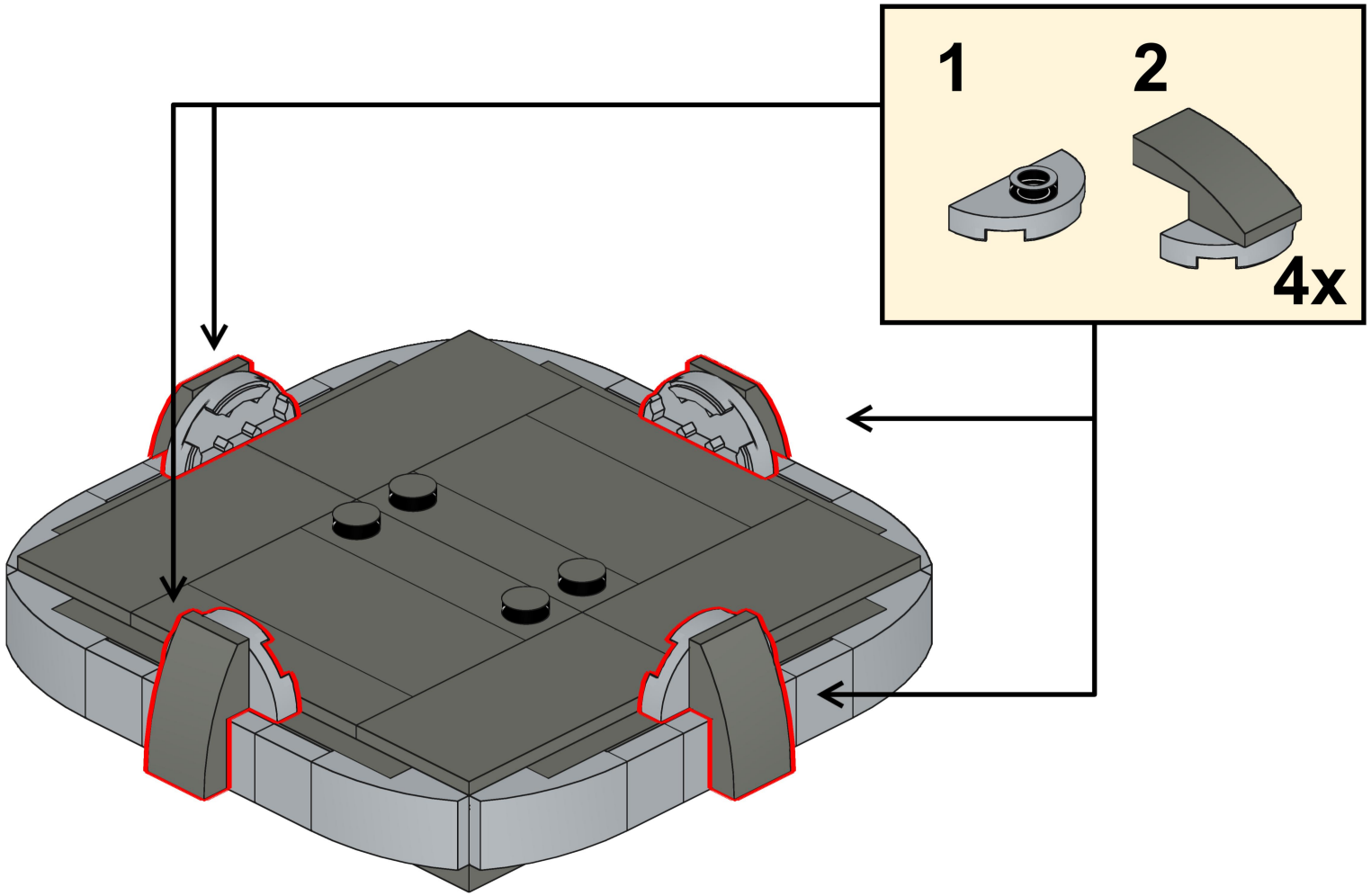

28

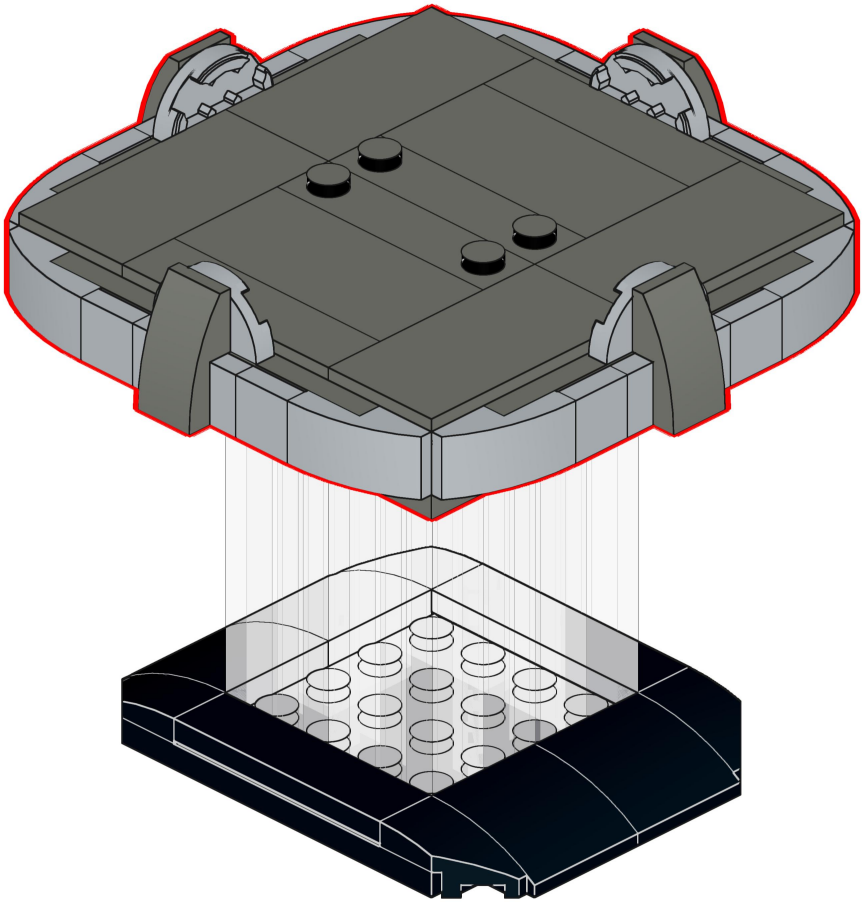

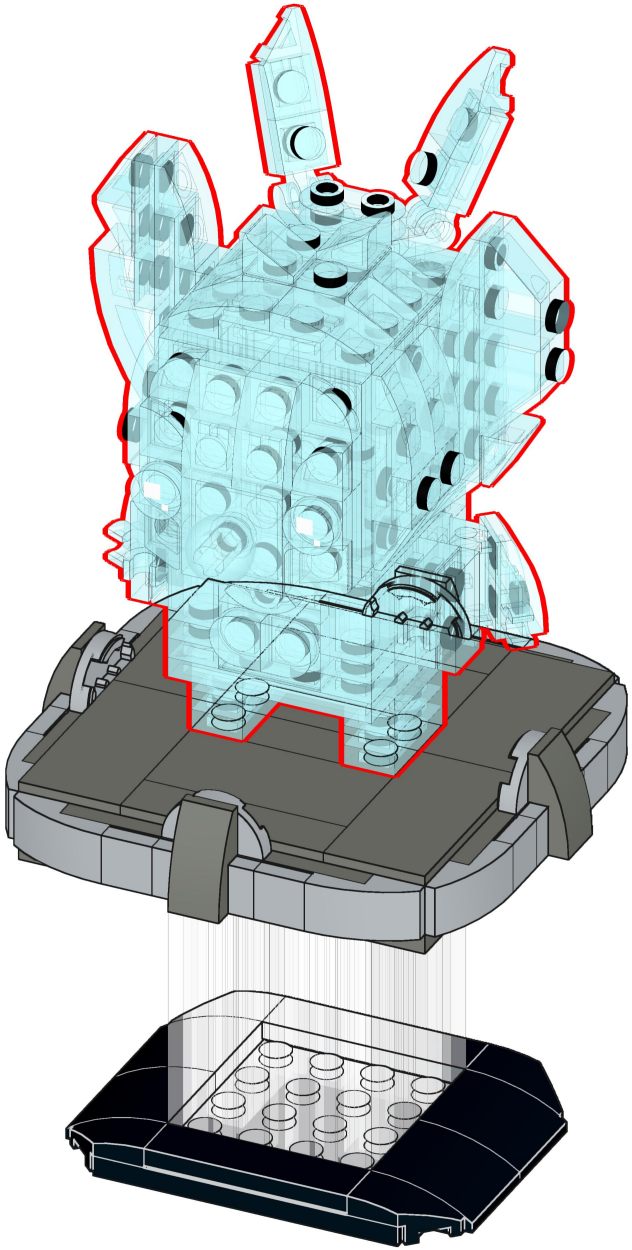

Set not included!

BriXpando

brixpando.com